Operation of Electrical Components in the Ignition Coil

The ignition coil ensures optimal combustion of the air-fuel mixture in the engine combustion chamber. If the coil is triggered for an excessive time, the primary current in the coil is driven down, so that spark-free engine shutdown is ensured. Diagnostic functions are also integrated. When an error is detected, pin 4 (trigger input) is switched to high impedance. This is detected in turn by the DME and the error is entered in the trouble code memory.

Cayenne S Spark Plugs

With these glide spark plugs the 4 ground electrodes are located to the side of the ceramic insulator. As a result, the sparks (1) always glide over the surface of the insulator (4) and jump through a small gas path to the ground electrode (2), producing better ignition properties. The primary benefit of the glide spark plug lies in the self-cleaning effect of the insulator tip since any shunts occurring between the center electrode and ground electrode are eliminated through the sliding sparks, particularly during cold starts.

These spark plugs make possible a change interval of 60,000 miles (90,000 km) in the Cayenne S.

Construction of the Cayenne S Glide Spark Plug

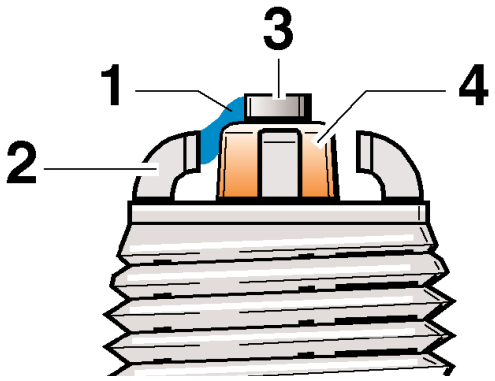

1 - Glide spark path
2 - Ground electrode
3 - Center electrode
4 - Insulator

Cayenne Turbo Spark Plugs

Special platinum spark plugs with one ground electrode are used in the Cayenne Turbo, allowing a change interval of 40,000 miles (60,000 km). Through the use of a very thin center electrode, voltage requirements are correspondingly reduced, to ensure adequate voltage reserves for the ignition system over its entire service life.

The use of glide spark plugs is not possible especially with turbocharged engines, since ceramic nicks can be caused on the insulator tip by higher combustion pressures, which in turn can result in reduced change intervals or premature failure of the spark plug.

Notes: