PORSCHE

911 GT3 Cup

Motorträger / *engine bracket*

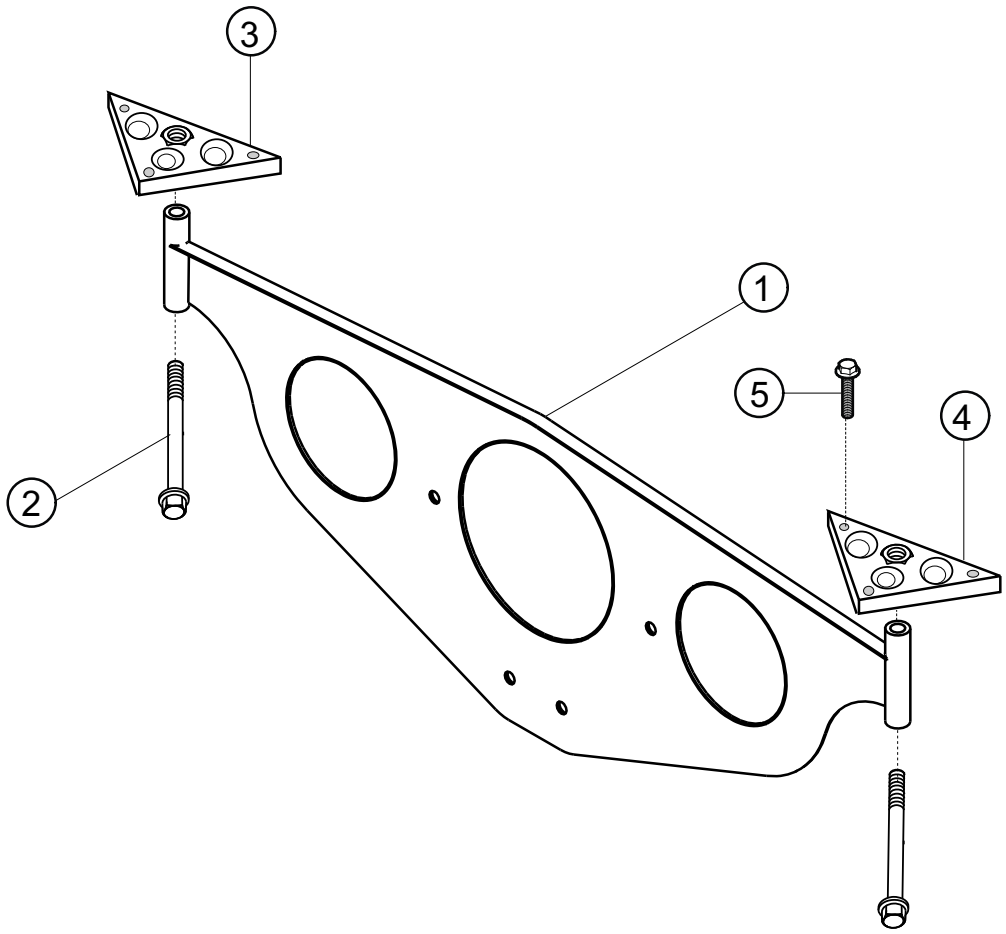

Pos.	Bezeichnung / Description		St./Pc.	Teile Nr./Part no.
1	Motorträger	R	1	996.375.011.94
	engine carrier			
2	6KT-SHR M10x130 10.9	R	2	900.378.129.09
	hex screw M10x130 10.9			
3	Adapterplatte links	R	1	996.375.121.90
	connecting plate left			
4	Adapterplatte rechts	R	1	996.375.122.90
	connecting plate right			
5	6KT-SHR M8x35		6	900.378.108.09
	hex screw M8x35			

Schutzvermerk nach DIN 34 beachten
Copyright reserved
Dr. Ing. h. c. F. Porsche
Aktiengesellschaft