Connector assignment

DME control module connector assignment

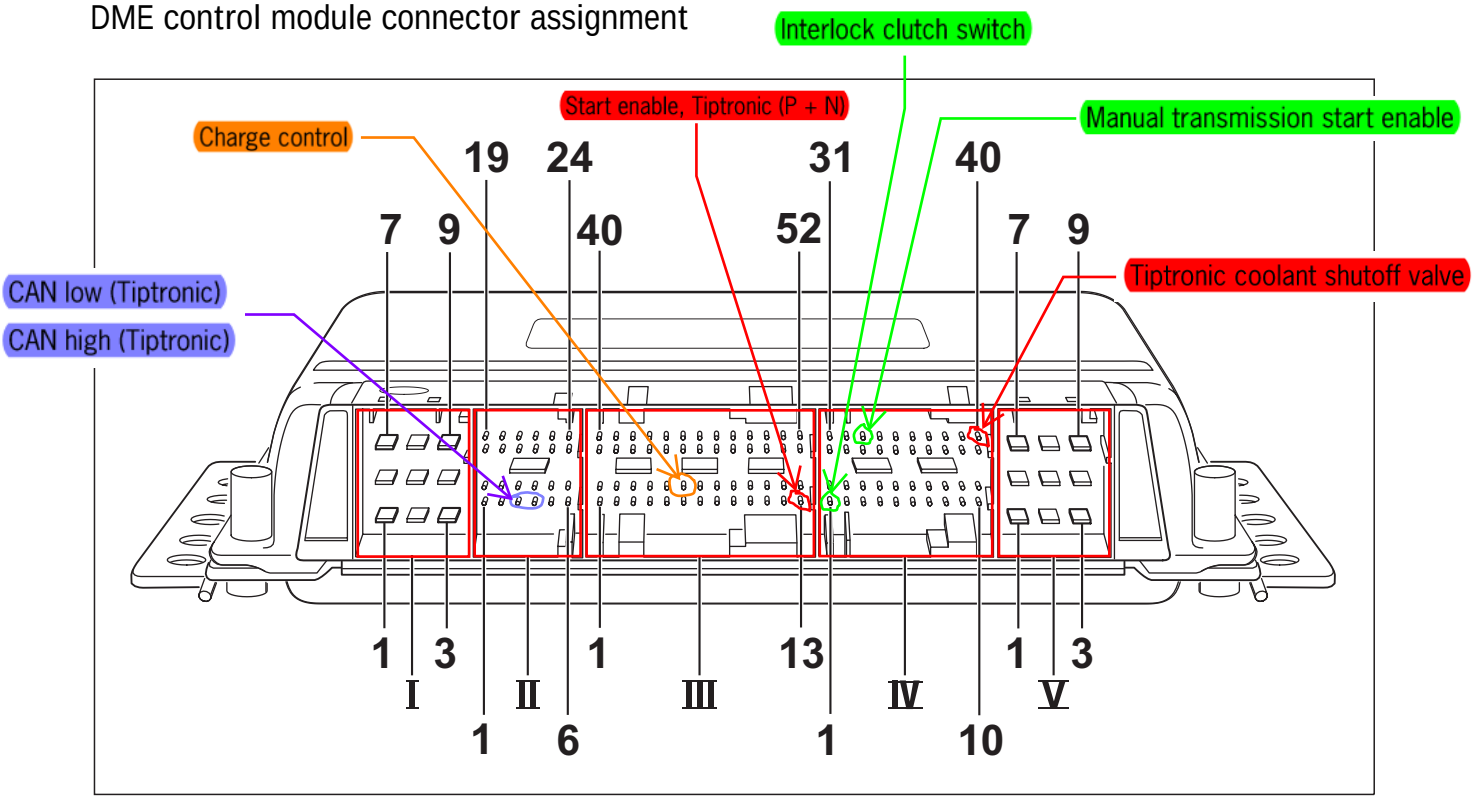

I - Connector I, 9-pole
II - Connector II, 24-pole
III - Connector III, 52-pole
IV - Connector IV, 40-pole
V - Connector IV, 9-pole

Connector I, 9-pole

Pin	Designation	Pin	Designation
1	Terminal 15	6	Ground, output stages
2	Terminal 30	7	Throttle motor actuator
3	W-wire	8	DME relay terminal 87
4	Ground, electronics	9	Throttle motor actuator
5	Ground, fuel injectors		

Connector II, 24-pole

Pin	Designation	Pin	Designation
1	Oxygen sensor heating 2 after catalytic converter	13	Oxygen sensor heating 2 ahead of catalytic converter
2	Pump current regulator of oxygen sensor 1 ahead of catalytic converter	14	Signal, oxygen sensor 2 after catalytic converter
3	CAN low (Tiptronic)	15	Signal, oxygen sensor 1 ahead of TWC
4	CAN high (Tiptronic)	16	Signal, oxygen sensor 2 ahead of catalytic converter
5	Pump current regulator of oxygen sensor 1 ahead of catalytic converter	17	Signal, oxygen sensor 1 after catalytic converter
6	Pump current regulator of oxygen sensor 1 ahead of catalytic converter	18	not assigned
7	Oxygen sensor heating 1 after catalytic converter	19	Oxygen sensor heating 1 ahead of catalytic converter
8	Ground, oxygen sensor 2 after catalytic converter	20	not assigned
9	Ground, oxygen sensor 1 after catalytic converter	21	Engine compartment temperature sensor
10	Ground, oxygen sensor 2 after catalytic converter	22	5 V supply for mass air flow sensor
11	Ground, oxygen sensor 1 after catalytic converter	23	not assigned
12	not assigned	24	Pump current regulator of oxygen sensor 2 ahead of catalytic converter

Connector III, 52-pole

Pin	Designation	Pin	Designation
1	Valve lift control, cylinder 1 - 3	27	Fuel injector, cylinder 4
2	Fuel injector, cylinder 5	28	Fuel injector, cylinder 6
3	EVAP canister purge valve (closed without flow)	29	not assigned
4	Frequency valve, charge pressure	30	not assigned
5	Oil temperature sensor	31	not assigned
6	not assigned	32	Ground
7	5 V supply for camshaft position? sensor and differential pressure sensor	33	not assigned
8	Signal, throttle position sensor 2	34	Intake air temperature sensor
9	Ground, mass air flow sensor	35	not assigned
10	5 V supply for throttle actuation	36	Input, knock sensor 2

Connector III, 52-pole

Pin	Designation	Pin	Designation
11	Triggering of secondary air pump relay (terminal 85)	37	Gound, knock sensor 2
12	Signal, camshaft position sensor 1	38	not assigned
13	Start enable, Tiptronic (P + N)	39	Charge pressure sensor
14	Secondary air valve	40	Fuel injector, cylinder 2
15	Fuel injector, cylinder 3	41	Fuel injector, cylinder 1
16	Overrun recirculating air valve	42	not assigned
17	Ground, sensors	43	not assigned
18	Signal, camshaft position sensor 2	44	not assigned
19	Charge control clutch??	45	Signal A, speed sensor
20	not assigned	46	
21	not assigned	47	not assigned
22	Engine coolant temperature sensor	48	not assigned
23	Signal, mass air flow sensor	49	Signal B, speed sensor
24	Signal, throttle position sensor 1	50	Gound, knock sensor 1
25	Ground, throttle position sensors 1 + 2	51	not assigned
26	Valve lift control, cylinder 4 - 6	52	Speed signal from ABS control module

Connector IV, 40-pole

Pin	Designation	Pin	Designation
1	Interlock clutch switch clutch start (micro)	21	Signal, differential pressure sensor
2	not assigned	22	not assigned
3	not assigned	23	not assigned
4	Coolant fan, stage 1	24	Automatic I/M test
5	not assigned	25	Triggering of engine compartment fan relay (terminal 85)
6	not assigned	26	Triggering of DME relay (terminal 85)
7	Ground, pedal sensor 1	27	Triggering of A/C compressor fan relay (terminal 85)
8	Signal, pedal sensor 1	28	not assigned
9	5 V supply, pedal sensor 1	29	Knocking signal
10	Triggering of fuel pump relay (terminal 85)	30	EVAP canister shutoff valve
11	not assigned	31	Coolant fan, stage 3
12	Ground, pedal sensor 2	32	not assigned
13	Signal, pedal sensor 2	33	Manual transmission start enable from relay? in place

Connector IV, 40-pole

Pin	Designation	Pin	Designation
14	5 V supply, pedal sensor 2	34	Air conditioning medium pressure switch
15	Ground, differential pressure sensor	35	not assigned
16	Crash signal (airbag)	36	CAN high (PSM and instrument cluster)
17	Speed signal output	37	CAN low (PSM and instrument cluster)
18	not assigned	38	not assigned
19	not assigned	39	not assigned
20	Coolant fan, stage 2	40	Tiptronic coolant shutoff valve

Connector V, 9-pole

Pin	Designation	Pin	Designation
1	Ignition coil, cylinder 6	6	Ignition coil, cylinder 1
2	Ignition coil, cylinder 4	7	Camshaft adjustment, bank 1
3	Ignition coil, cylinder 2	8	Camshaft adjustment, bank 2
4	Ignition coil, cylinder 5	9	Ignition coil, cylinder 3
5	Ground		

► Product code
► Country code
► Model year
Always have the necessary information ready.

Number groups and their meaning:
X: Exclusive
M: Additional equipment
Z: Tequipment
PR: Additional VW equipment (and model type Cayenne)

M249 - tiptronic
M480 - 6 speed
manual coding - G9631

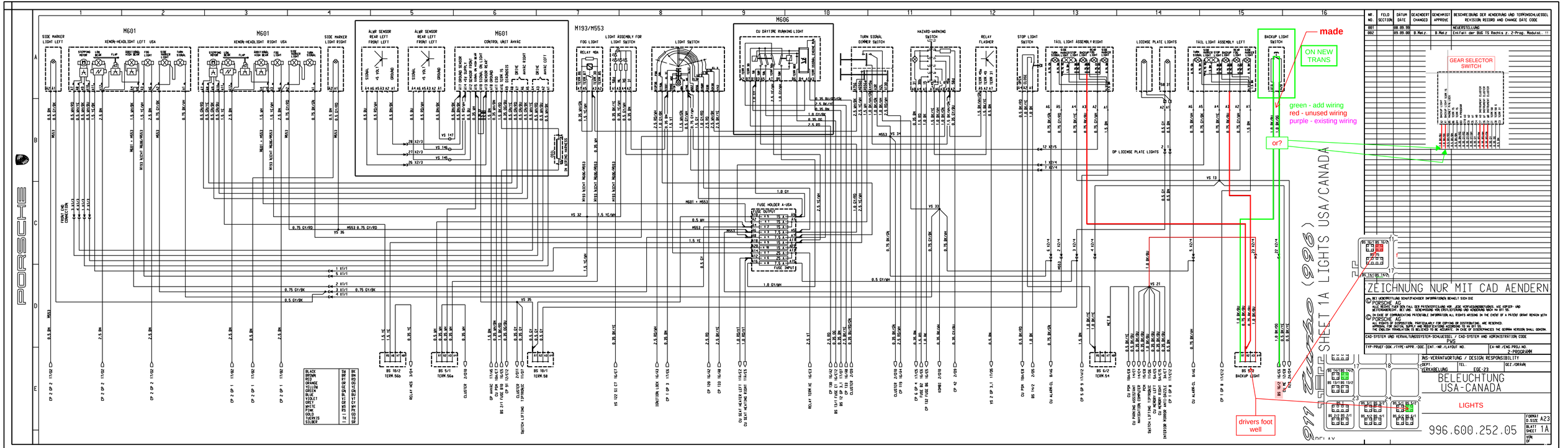

NR. NO.	FELD SECTION	DATUM DATE	GEAENDERT CHANGED	GENEHMIGT APPROVE	BESCHREIBUNG DER AENDERUNG UND TERMINSCHLUESSEL REVISION RECORD AND CHANGE DATE CODE
001		09.09.99			NEUERSTELLUNG
002		09.09.00	B.Metz	B.Metz	Entfall der BUG TS Rechts z. Z-Prog. Modulst. ??

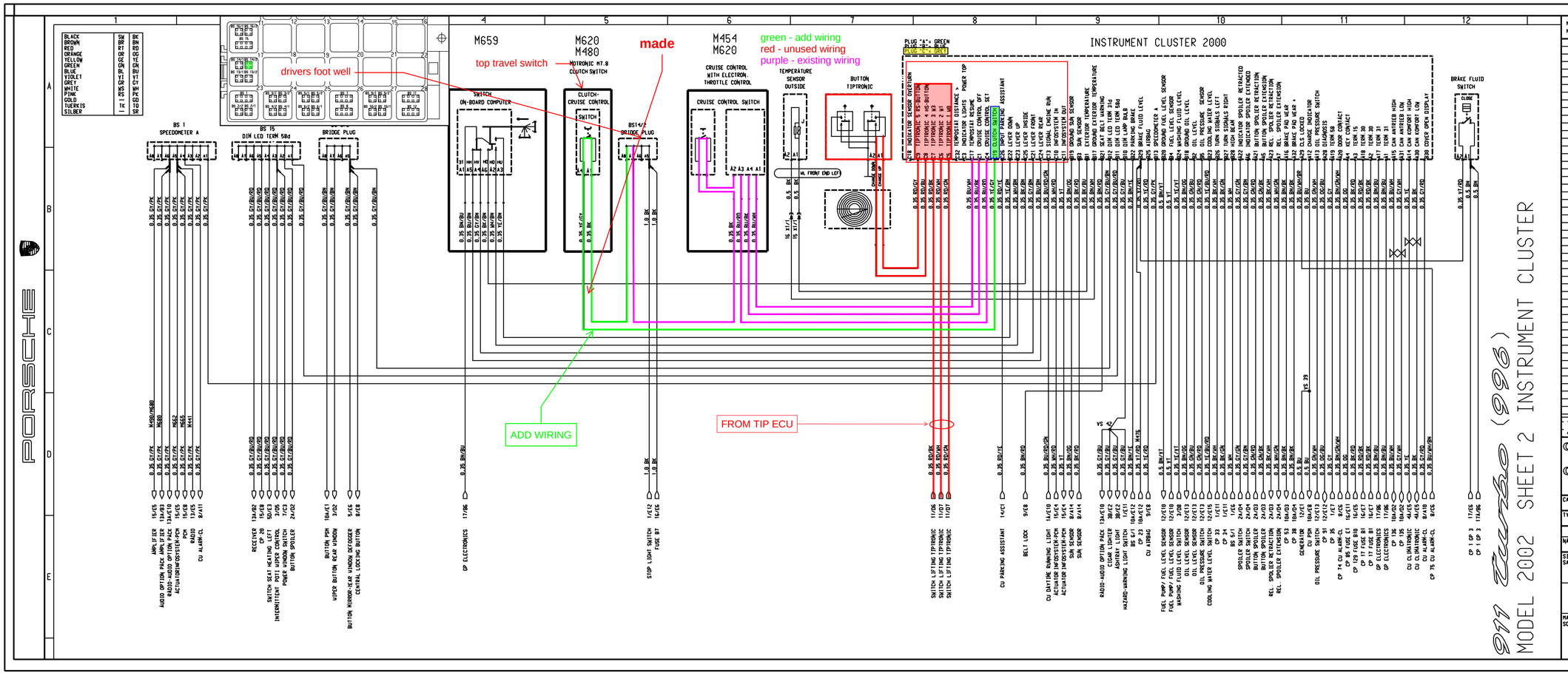

NR. NO.	FELD SECTION	DATUM DATE	GEAENDERT CHANGED	GENEHMIGT APPROVE	BESCHREIBUNG DER AENDERUNG UND TERMINSCHLUESSEL REVISION RECORD AND CHANGE DATE CODE

ZEICHNUNG NUR MIT CAD AENDERN

© BEI UEBERMITTLUNG SCHUTZ-ABHEIER INFORMATIONEN BEHALT SICH DIE PORSCHE AG
ALLE RECHTE FUER DEN FALL DER PATENTERTEILUNG VOR. JEDE VERFUEGUNGSBEFUGNIS, WIE KOPIER- UND WEITERGABERECHT, BEI UNS. GENEHMIGUNG VON ERSTELLERFIRMA UND AENDERUNG NACH WV DIT 55.
© IN CASE OF COMMUNICATING PATENTABLE INFORMATION ALL RIGHTS ARISING IN THE EVENT OF A PATENT GRANT REMAIN WITH PORSCHE AG
ALL RIGHTS OF DISPOSITION, PARTICULARLY FOR COPYING OR DISTRIBUTING, ARE RESERVED.
APPROVAL FOR INITIAL SUPPLY AND MODIFICATIONS ACCORDING TO VW DIT 55.
THE ENGLISH TRANSLATION IS BELIEVED TO BE ACCURATE. IN CASE OF DISCREPANCIES THE GERMAN VERSION SHALL GOVERN.

CAD-SYSTEM UND VERWALTUNGSSYSTEM-SCHLUESSEL / CAD-SYSTEM AND ADMINISTRATION CODE
PVS

TYP-PRUEF-DOK./TYPE-APPR.-DOC.	ENT.-NR./LAYOUT NO.	EA-NR./ENG PROJ.NO. 2-PROGRAMM

KONSTRUKTIONS-VERANTWORTUNG / DESIGN RESPONSIBILITY

NAME	ABT./DEPT.	TEL.	GEZ./DRAWN
BORDNETZ	VERKABELUNG	EGE-23	

SICH.-DOK. SAFETY DOC.	BENENNUNG	KOMBIINSTRUMENT
2	TITLE	INSTRUMENT CLUSTER
MASZSTAB SCALE	TEIL-NR. PART-NO.	996.600.253.05
FORMAT D.SIZE A22	BLATT SHEET 2	VON OF

BLACK	SW	BK
BROWN	BR	BN
RED	RT	RD
ORANGE	OR	OG
YELLOW	GE	YE
GREEN	GN	GN
BLUE	BL	BU
VIOLET	VI	VT
GREY	GR	GY
WHITE	WS	WH
PINK	RS	PK
GOLD	—	GD
TUERKIS	TK	TQ
SILBER	—	SR

green - add wiring
red - unused wiring
purple - existing wiring

M425
REAR WINDOW WIPER

M288
HEADLIGHT CLEANERS

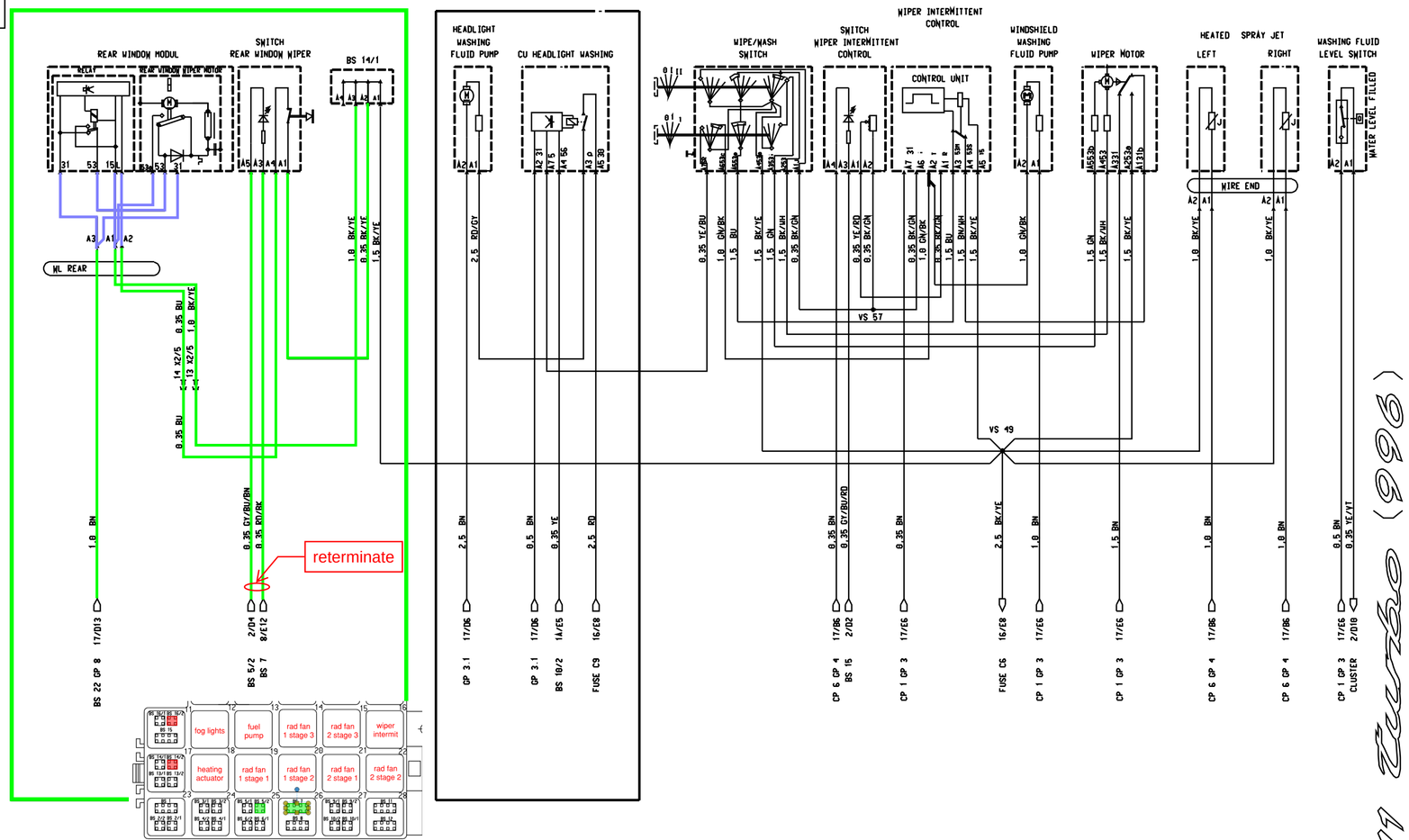

911 Turbo (996)

MODEL 2002 SHEET 3 WIPER_HCS_REAR WINDOW WIPER

NR. NO.	FELD SECTION	DATUM DATE	GEAENDERT CHANGED	GENEHMIGT APPROVE	BESCHREIBUNG DER AENDERUNG UND TERMINSCHLUESSEL REVISION RECORD AND CHANGE DATE CODE

ZEICHNUNG NUR MIT CAD AENDERN

© BEI UEBERMITTLUNG SCHUTZFAEHIGER INFORMATIONEN BEHAELT SICH DIE PORSCHE AG ALLE RECHTE FUER DEN FALL DER PATENTERTEILUNG VOR. JEDE VERFUEGUNGSBEFUGNIS, WIE KOPIER- UND WEITERGABERECHT, BEI UNS. GENEHMIGUNG VON ERSTLIEFERUNG UND AENDERUNG NACH VW 011 55.

© IN CASE OF COMMUNICATING PATENTABLE INFORMATION, ALL RIGHTS ARISING IN THE EVENT OF A PATENT GRANT REMAIN WITH PORSCHE AG ALL RIGHTS OF DISPOSITION, PARTICULARLY FOR COPYING OR DISTRIBUTING, ARE RESERVED. APPROVAL FOR INITIAL SUPPLY AND MODIFICATIONS ACCORDING TO VW 011 55. THE ENGLISH TRANSLATION IS BELIEVED TO BE ACCURATE. IN CASE OF DISCREPANCIES THE GERMAN VERSION SHALL GOVERN.

CAD-SYSTEM UND VERWALTUNGSSYSTEM-SCHLUESSEL / CAD-SYSTEM AND ADMINISTRATION CODE: PVS

TYP-PRUEF-DOK./TYPE-APPR.-DOC.	ENT.-NR./LAYOUT NO.	EA-NR./ENG.PROJ.NO.
		2-PROGRAMM

KONSTRUKTIONS-VERANTWORTUNG / DESIGN RESPONSIBILITY

NAME	ABT./DEPT.	TEL.	GEZ./DRAWN
BORDNETZ	VERKABELUNG	EGE-23	

SICH.-DOK. / SAFETY DOC.: 3

BENENNUNG: WISCHER-SRA HECKWISCHER

TITLE: M288 / M425

MASSSTAB / SCALE:

TEIL-NR. / PART-NO.: 996.600.254.05

FORMAT / D.SIZE: A21

BLATT / SHEET: 3

VON / OF:

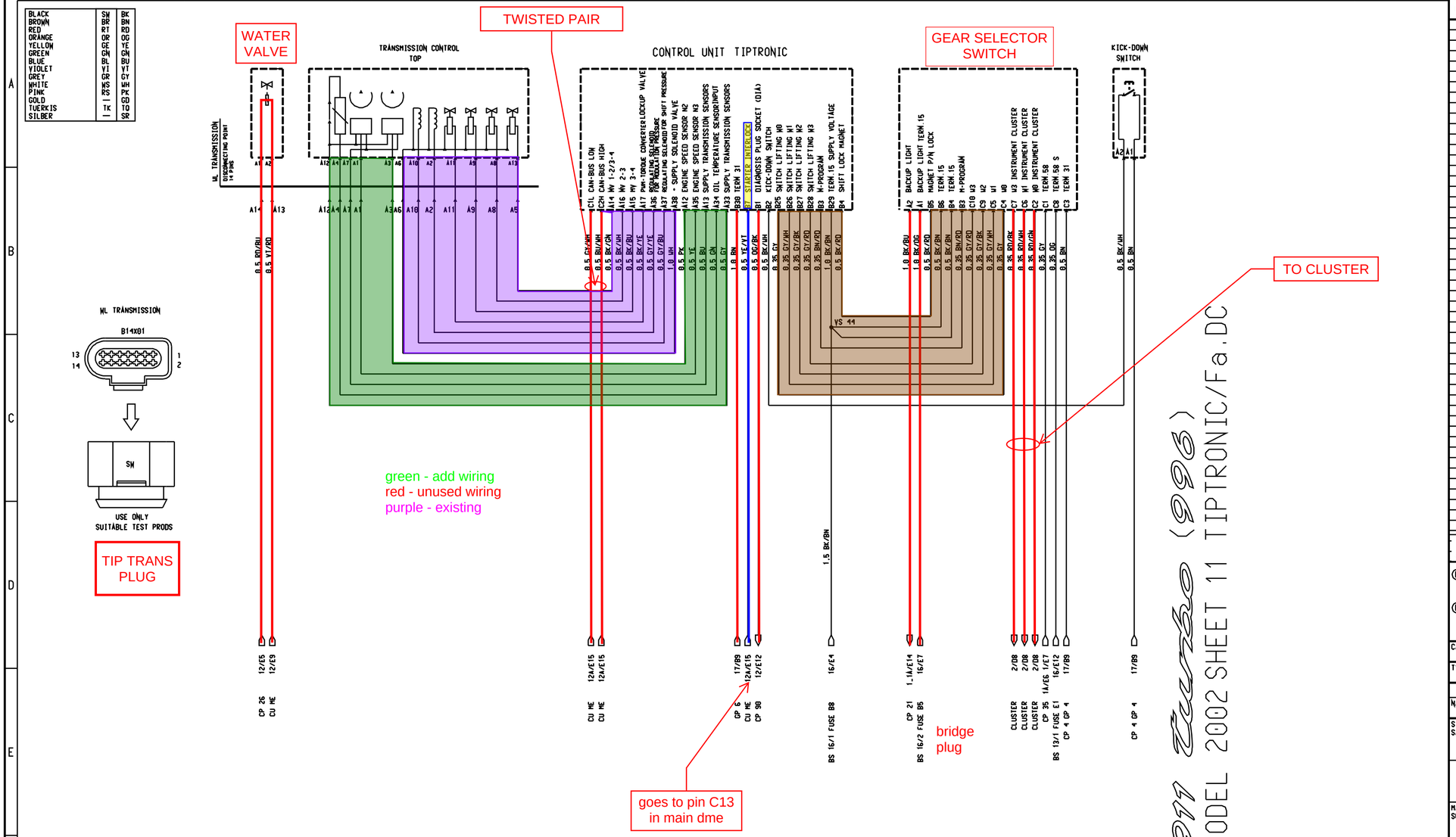

BLACK	SW	BK
BROWN	BR	BN
RED	RT	RD
ORANGE	OR	OG
YELLOW	GE	YE
GREEN	GN	GN
BLUE	BL	BU
VIOLET	VI	VI
GREY	GR	GY
WHITE	WS	WH
PINK	RS	PK
GOLD	—	GD
TUERKIS	TK	TQ
SILBER	—	SR

NR. NO.	FELD SECTION	DATUM DATE	GEAENDERT CHANGED	GENEHMIGT APPROVE	BESCHREIBUNG DER AENDERUNG UND TERMINSCHLUESSEL REVISION RECORD AND CHANGE DATE CODE

ZEICHNUNG NUR MIT CAD AENDERN

© BEI UEBERMITTLUNG SCHUTZFAEHIGER INFORMATIONEN BEHAELT SICH DIE PORSCHE AG ALLE RECHTE FUER DEN FALL DER PATENTERTEILUNG VOR. JEDE VERFUEGUNGSBEFUGNIS. WIE KOPIER- UND WEITERGABERECHT. BEI UNS. GENEHMIGUNG VON ERSTLIEFERUNG UND AENDERUNG NACH VW 011 55.
© IN CASE OF COMMUNICATING PATENTABLE INFORMATION ALL RIGHTS ARISING IN THE EVENT OF A PATENT GRANT REMAIN WITH PORSCHE AG
ALL RIGHTS OF DISPOSITION, PARTICULARLY FOR COPYING OR DISTRIBUTING, ARE RESERVED. APPROVAL FOR INITIAL SUPPLY AND MODIFICATIONS ACCORDING TO VW 011 55. THE ENGLISH TRANSLATION IS BELIEVED TO BE ACCURATE. IN CASE OF DISCREPANCIES THE GERMAN VERSION SHALL GOVERN.

CAD-SYSTEM UND VERWALTUNGSSYSTEM-SCHLUESSEL / CAD-SYSTEM AND ADMINISTRATION CODE: PWS

TYP-PRUEF-DOK./TYPE-APPR.-DOC. | ENT.-NR./LAYOUT NO. | EA-NR./ENG.PROJ.NO.: 2-PROGRAMM

KONSTRUKTIONS-VERANTWORTUNG / DESIGN RESPONSIBILITY

NAME	ABT./DEPT.	TEL.	GEZ./DRAWN
BORDNETZ	VERKABELUNG	EGE-23	

SICH.-DOK. / SAFETY DOC.

BENENNUNG: TIPTRONIC

1 1

TITLE: M249

MASSSTAB / SCALE

TEIL-NR. / PART-NO.: 996.600.261.05

FORMAT / D.SIZE: A21

BLATT / SHEET: 11

VON / OF

OTHER CIRCUITS
SEE
SHEET 12/12A

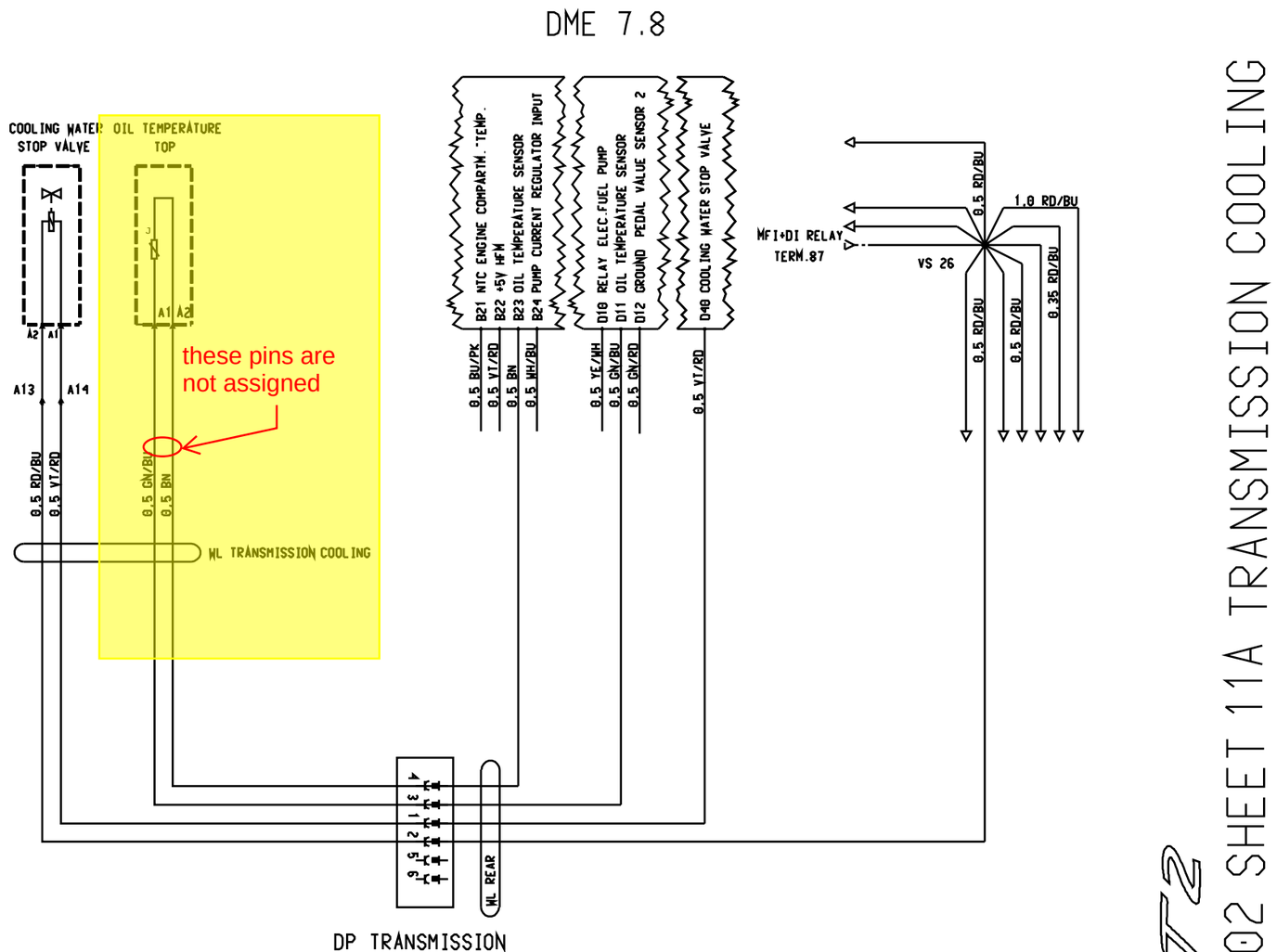

911 GT2
MODEL 2002 SHEET 11A TRANSMISSION COOLING

NR. NO.	FELD SECTION	DATUM DATE	GEAENDERT CHANGED	GENEHMIGT APPROVE	BESCHREIBUNG DER AENDERUNG UND TERMINSCHLUESSEL REVISION RECORD AND CHANGE DATE CODE
001		01.12.00	RE		NEUERSTELLUNG

ZEICHNUNG NUR MIT CAD AENDERN

© BEI UEBERMITTLUNG SCHUTZFAEHIGER INFORMATIONEN BEHAELT SICH DIE PORSCHE AG ALLE RECHTE FUER DEN FALL DER PATENTERTEILUNG VOR. JEDE VERFUEGUNGSBEFUGNIS. WIE KOPIER- UND WEITERGABERECHT. BEI UNS. GENEHMIGUNG VON ERSTLIEFERUNG UND AENDERUNG NACH VW 011 55.

© IN CASE OF COMMUNICATING PATENTABLE INFORMATION ALL RIGHTS ARISING IN THE EVENT OF A PATENT GRANT REMAIN WITH PORSCHE AG ALL RIGHTS OF DISPOSITION, PARTICULARLY FOR COPYING OR DISTRIBUTING, ARE RESERVED. APPROVAL FOR INITIAL SUPPLY AND MODIFICATIONS ACCORDING TO VW 011 55. THE ENGLISH TRANSLATION IS BELIEVED TO BE ACCURATE. IN CASE OF DISCREPANCIES THE GERMAN VERSION SHALL GOVERN.

CAD-SYSTEM UND VERWALTUNGSSYSTEM-SCHLUESSEL / CAD-SYSTEM AND ADMINISTRATION CODE: PWS

TYP-PRUEF-DOK./TYPE-APPR.-DOC.	ENT.-NR./LAYOUT NO.	EA-NR./ENG.PROJ.NO.
		2-PROGRAMM

KONSTRUKTIONS-VERANTWORTUNG / DESIGN RESPONSIBILITY

NAME	ABT./DEPT.	TEL.	GEZ./DRAWN
BORDTNETZE	VERKABELUNG	EGE 23	REITH

SICH.-DOK. / SAFETY DOC.

BENENNUNG: GETRIEBEKUEHLUNG

11A

TITLE: TRANSMISSION COOLING

MASZSTAB / SCALE

TEIL-NR. / PART-NO.: 996.600.261.70

FORMAT / D.SIZE: A2

BLATT / SHEET: 11A

VON / OF

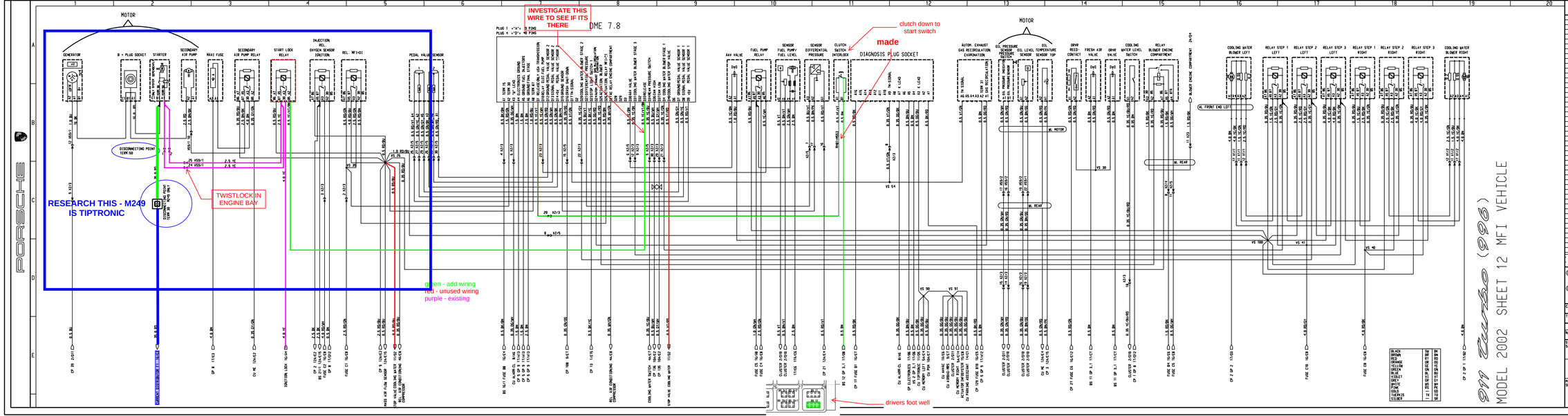

NR NO.	FELD SECTION	DATUM DATE	GEANDERT CHANGED	GENEHMIGT APPROVE	BESCHREIBUNG DER ANDERUNG UND TERMINVERLAUFSEL REVISION RECORD AND CHANGE DATE CODE

ZEICHNUNG NUR MIT CAD AENDERN

(D) BEI VORENTWURF SONSTIGEN INFORMATIONEN BEHALTT SICH DIE PORSCHE AG
VORBEHALTLICH DER FALL DER VERVIELFALTUNG, WEITERGABE UND VERWENDUNGSZWECKE, WIE KOPIEREN UND WEITERGABEFORT. BEI UND - BEACHTUNG VON ERFOLGTERFORD UND ANDERUNG NACH IN DIT 15.
(E) IN CASE OF COMPARATIVE PRESENTATION PATENTABLE INFORMATION ALL RIGHTS RESERVED IN THE EVENT OF A PATENT GRANT REMAIN WITH PORSCHE AG
WITHOUT THE EXPRESSED, PARTICULARLY FOR COPYING OR DISTRIBUTING, ARE RESERVED
WITHOUT THE EXPRESS WRITTEN AGREEMENT OF PORSCHE AG IN DIT 15.
THE ENGLISH TRANSLATION IS DEDICATED TO BE ACCURATE. IN CASE OF DISCREPANCIES THE GERMAN VERSION SHALL GOVERN

CAD-SYSTEM UND VERWALTUNGSSYSTEM-SCHLUESSEL / CAD-SYSTEM AND ADMINISTRATION CODE

PVS

TYP-PROJEKT-DOK. / TYPE-APPR.-DOC.	EXT.-NR./LAYOUT NO.	EX-NR./ENG.PROJ.NO.
		2-PROGRAMM

KONSTRUKTIONS-VERANTWORTUNG / DESIGN RESPONSIBILITY

NAME	ABT./DEPT.	TEL.	GEZ./DRAWN
BORCHITZ	VERKABELUNG	EGE-23	

SICH.-DOC. SAFETY DOC.	BENENNUNG	
12	TITLE	DME FAHRZEUGBEREICH VEHICLE READY
MAESTAB SCALE	TEIL-NR. PART-NO.	996.600.269.05
	FORMAT D.SIZE	A24
	BLATT SHEET	12
	VPN VP	

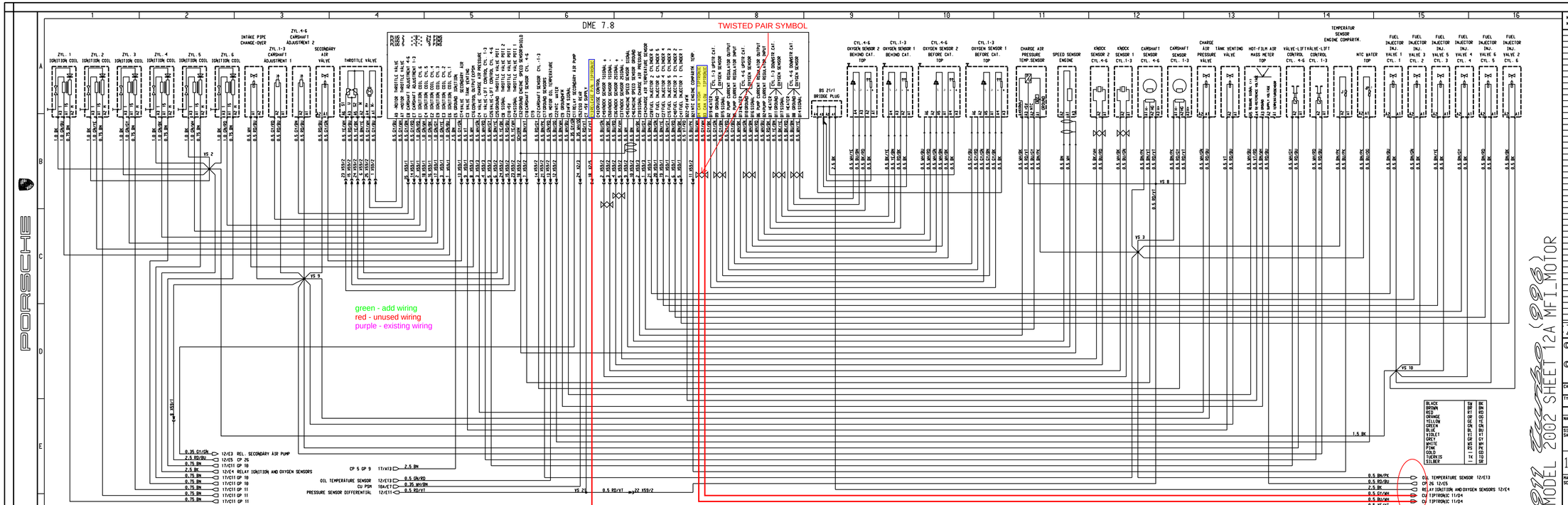

NR. NO.	FELD SECTION	DATUM DATE	GEAENDERT CHANGED	GENEHMIGT APPROVE	BESCHREIBUNG DER AENDERUNG UND TERMINSCHLUESSEL REVISION RECORD AND CHANGE DATE CODE

ZEICHNUNG NUR MIT CAD AENDERN

© BEI UEBERMITTLUNG SCHUTZFAEHIGER INFORMATIONEN BEHAELT SICH DIE PORSCHE AG
AUCH BEIDER FUER DEN FALL DER PATENTERTEILUNG VOR, JEDE VERFUEGUNGSRECHTUNG WIE KOPIER- UND WEITERGABERECHT, BEI UND GEBRAUCHSMUSTER ERTEILUNG UND VERWENDUNG NACH IN DIN 55
© IN CASE OF COMMUNICATING PATENTABLE INFORMATION ALL RIGHTS ARISING IN THE EVENT OF A PATENT GRANT REMAIN WITH PORSCHE AG
ALL RIGHTS OF DISPOSITION, PARTICULARLY FOR COPYING OR DISTRIBUTING, ARE RESERVED.
APPROVAL FOR DISTRIBUTION, COPYING AND UTILIZATION ACCORDING TO DIN 34 1 TO
THE ENGLISH TRANSLATION IS BELIEVED TO BE ACCURATE. IN CASE OF DISCREPANCIES THE GERMAN VERSION SHALL GOVERN.

CAD-SYSTEM UND VERWALTUNGSSYSTEM-SCHLUESSEL / CAD-SYSTEM AND ADMINISTRATION CODE

PUS

TYP-PRUEF-DOC /TYPE-APPR.-DOC. | ENT.-NR./LAYOUT NO. | EA-NR./ENG.PROJ.NO. 2-PROGRAMM

KONSTRUCTIONS-VERANTWORTUNG / DESIGN RESPONSIBILITY

NAME	ABT./DEPT.	TEL.	GEZ./DRAWN
BORONETZ	VERKABELUNG	EGE-23	

SICH.-DOC. / SAFETY DOC

BENENNUNG

DME
MOTORBEREICH

TITLE

12A

MOTOR READY

MASZSTAB SCALE | TEIL-NR. PART-NO. 996.600.268.05

FORMAT A23 D.SIZE

BLATT SHEET 12A

VIN

GP

911 Turbo (996)
MODEL 2002 SHEET 12A MFI_MOTOR

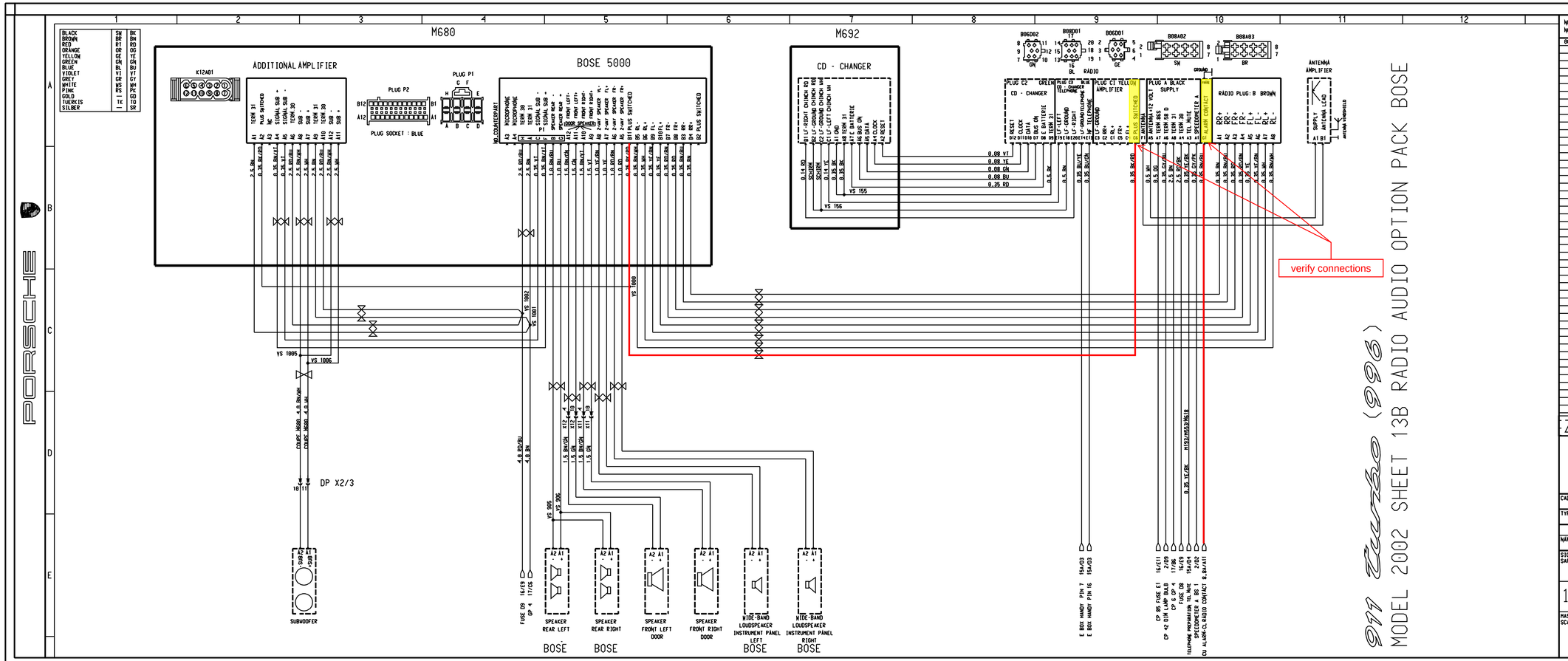

NR. NO.	FELD SECTION	DATUM DATE	GEAENDERT CHANGED	GENEHMIGT APPROVE	BESCHREIBUNG DER AENDERUNG UND TERMINSCHLUESSEL REVISION RECORD AND CHANGE DATE CODE
001		27.02.98	Seibert		(+) Verschaltung Verstaerker (VS1000) eingefuegt

ZEICHNUNG NUR MIT CAD AENDERN

PORSCHE AG
ALLE RECHTE FUER DEN FALL DER PATENTERTEILUNG VOR. JEDE VERFUEGUNGSBERECHTIGUNG, WIE KOPIER- UND WEITERGABERECHT, BEI UNS.
PORSCHE AG
ALL RIGHTS OF DISPOSITION, PARTICULARLY FOR COPYING OR DISTRIBUTING, ARE RESERVED.

CAD-SYSTEM UND VERWALTUNGSSYSTEM-SCHLUESSEL / CAD-SYSTEM AND ADMINISTRATION CODE: V O B E 9VSVersion: 2.3.3

TYP-PRUEF-DOK./TYPE-APPR.-DOC. | ENT.-NR./LAYOUT NO. | EA-NR./ENG PROJ.NO. 2-PROGRAMM

KONSTRUKTIONS-VERANTWORTUNG / DESIGN RESPONSIBILITY

NAME	ABT./DEPT.	TEL.	GEZ./DRAWN
BORDNETZ	VERKABELUNG	EGE-23	

SICH.-DOK. / SAFETY DOC.

BENENNUNG: RADIO-VERSTAERKER BOSE ANALOG

13B

TITLE: M680... M692

MASZSTAB / SCALE

TEIL-NR. / PART-NO.: 996.600.297.05

FORMAT / D.SIZE: A22

BLATT / SHEET: 13B

VON / OF

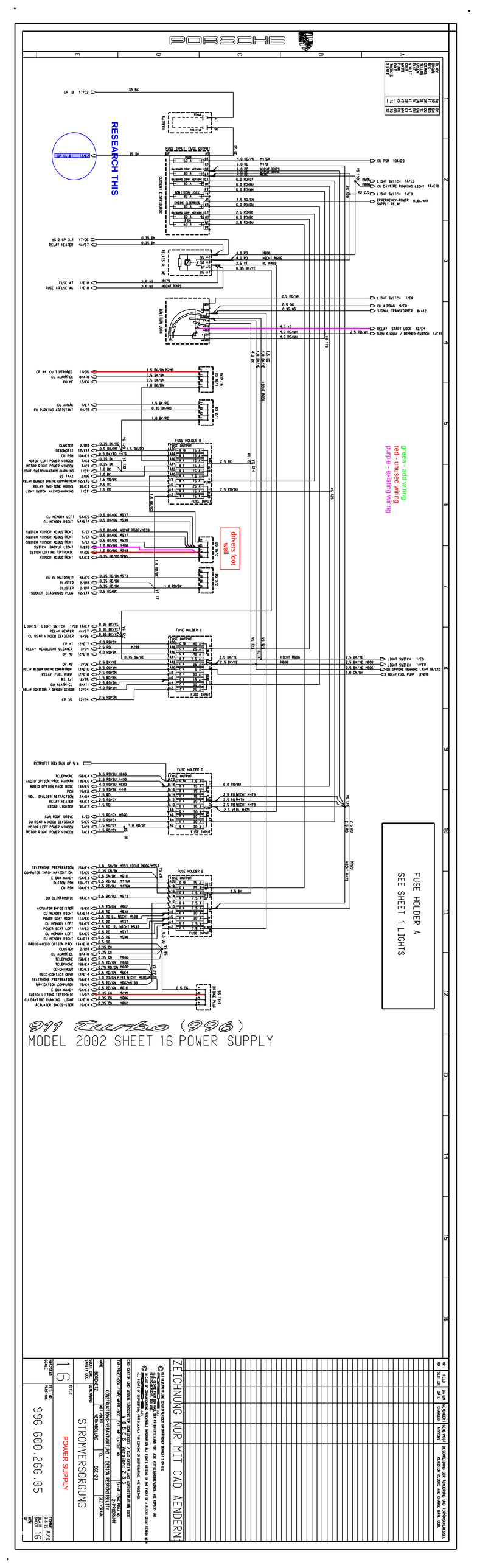
PORSCHE
RESEARCH THIS
green - add wiring
red - unused wiring
purple - existing wiring
drivers foot well
FUSE HOLDER A
SEE SHEET 1 LIGHTS
911 Turbo (996)
MODEL 2002 SHEET 16 POWER SUPPLY
STROMVERSORGUNG
POWER SUPPLY
996.600.266.05
ZEICHNUNG NUR MIT CAD AENDERN

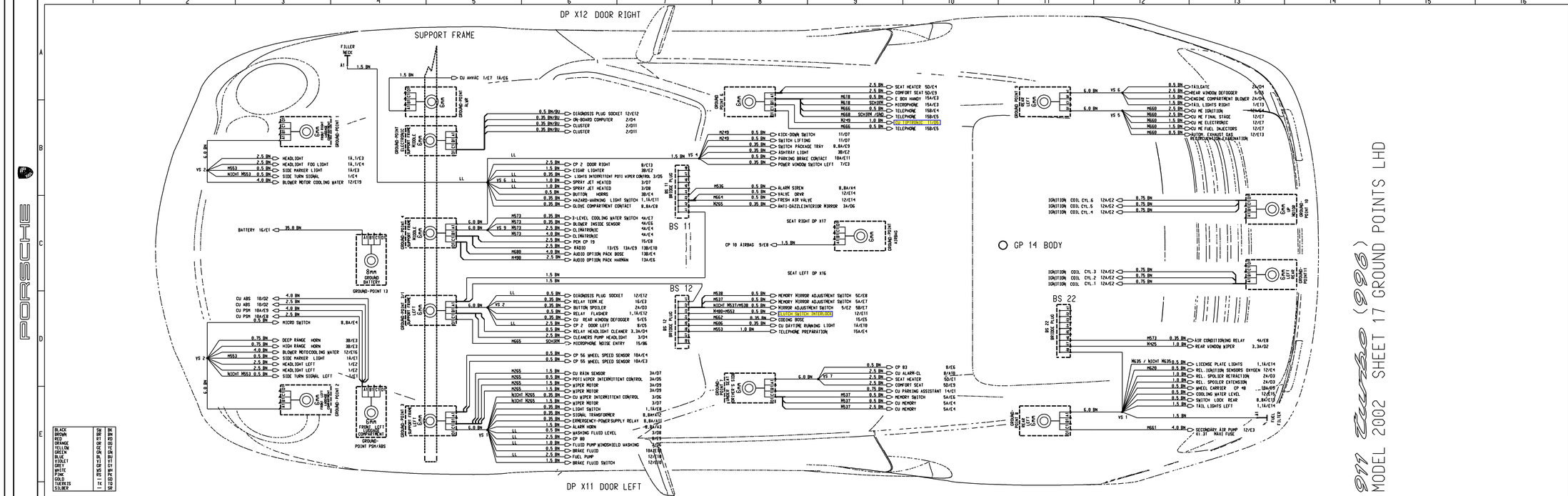

BLACK	SW BK
BROWN	BR BN
RED	RT RD
ORANGE	OR OG
YELLOW	GE YE
GREEN	GN GN
BLUE	BL BU
VIOLET	VI VT
GREY	GR GY
WHITE	WS WH
PINK	RS PK
GOLD	— GD
TUCENIS	TC TG
SILBER	— SR

911 turbo (996) MODEL 2002 SHEET 17 GROUND POINTS LHD

NR. NO.	FELD SECTION	DATUM DATE	GEANDERT CHANGED	GENEHMIGT APPROVE	BESCHREIBUNG DER ANDERUNG UND TERMINSCHLUESSEL REVISION RECORD AND CHANGE DATE CODE
					Ltg Alarmhorn auf VS 1 verlegt
					Bezeichnung von BS 12 ge ndert
					Masse von Heckleuchte (I3 auf MP 9 verlegt
					Innenraum-Sensor Masse Ltg. auf VS 80 verlegt
					Schiebedach Masse Ltg auf VS 80 verlegt
					VS 80 wird L Verbindder
					Ltg zum VS 80 auf 2.5 qmm erh ht
					MP 1 LL Bez. an den Leitungen ist NEU
				MP2.1	Ltg Querschn. von Kabelschuh zum VS 2 auf 6mm² erh ht
				Zuleitungen zu den	BS 11 und 12 eigener Kabelschuh Querschn. 1.5 qmm
					Ltg vom VS 6 zur I5 X12 rechte Tuer wird LL
					Ltg vom VS 2 zur I5 X11 linke Tuer wird LL
					Ltg Masse(-Anbindgt.em M662 auf MP4 bekommt eigener Kabelschuh
				Ltg vom VS 6 zum VS 4	auf 1.5 qmm reduziert VS 4 sitzt im Mittelkonsolenbereich
					Ltg vom VS 2 zur Diagnose Dose bekommt die LL
					Ltg vom VS 6 zum Kraftstoff-Inf. bekommt LL
					Ltg vom VS 6 zum Waschd se rechts bekommt LL
					Ltg zum Abzweigbech Mittelkonsole auf VS 4
					Ltg zum Aschenbel. Mittelkonsole auf VS 4
					Ltg zum Handbremse Mittelkonsole auf VS 4
					Ltg zum Fernbedienbech. Mittelkonsole auf VS 4
					Ltg zur ALARMSIRENE M7 8 auf BS 11 VERLEGT
					Ltg zur Motordeckel neuer Verlauf zum VS 6
					Ltg zum Motorgeb se neuer Verlauf zum VS 6
					Ltg zum Heckleuchte rechts neuer Verlauf zum VS 5
					Ltg zur Heckscheibe rechts neuer Verlauf zum VS 6
					neue Ltg. von MP9 zur VS 6 ist NEU
					Ltg auf 6mm zum VS 1 erh ht
					Ltg auf 6mm zum VS 9 erh ht
					Ltg auf 0.5mm zum Regen-Sensor-Pol.- erh ht
					Ltg auf 0.5mm zum Memory Schalter erh hlbe: MS38 MP6
					Ltg auf 0.5mm zum Memory Schalter erh hlbe: MS37 MP7
					Ltg auf 6mm zum VS 16 erh ht
					Ltg auf 6mm zum VS 7 erh ht
					Ltg auf 6mm zum VS 6 erh ht Heck ES
					Ltg auf 6mm zum VS 1 erh ht Heck ES

ZEICHNUNG NUR MIT CAD AENDERN

(c) BEI VEROEFFENTLICHUNG SCHUTZFAEHIGER INFORMATIONEN BEHALT SICH DIE
PORSCHE AG
ALLE RECHTE FUER DEN FALL DER PATENTERTEILUNG VOR. JEDE VERFUEGUNGSBEFUGNIS WIE KOPIER- UND WEITERGABERECHT, BEI UNS. GEWERBLICHE NON EXPLOITATION UND VERWENDUNG NICHT IN BRIEFEN.
(c) IN CASE OF COPYRIGHTING PATENABLE INFORMATION ALL RIGHTS ARISING IN THE EVENT OF A PATENT GRANT REMAIN WITH
PORSCHE AG
ALL RIGHTS OF DISPOSITION, PARTICULARLY FOR COPYING OR DISTRIBUTING, ARE RESERVED.
APPROVAL FOR DISTRIBUTION MUST BE REQUESTED ACCORDING TO DIN 34 BLATT 1.
THE ENGLISH TRANSLATION IS BELIEVED TO BE ACCURATE. IN CASE OF DISCREPANCIES THE GERMAN VERSION SHALL GOVERN.

CAD-SYSTEM UND VERWALTUNGSSYSTEM-SCHLUESSEL / CAD-SYSTEM AND ADMINISTRATION CODE

TYP-PRUEF-DOK./TYPE-APPR.-DOC.	INT.-NR./LAYOUT NO.	EA-NR./ENG.PROJ.NO.
		Z-PROGRAM

KONSTRUKTIONS-VERANTWORTUNG / DESIGN RESPONSIBILITY

NAME	ABT./DEPT.	TEL.	GEZ./DRAWN
BORONETZ	VERKABELUNG	EGE-23	

SICH.-DOK. / SAFETY DOC	BENENNUNG	MASSEPUNKTE LL
17	TITLE	MASS POINTS LHD
MASZSTAB SCALE	TEIL-NR. PART-NO.	996.600.267.05
FORMAT DIN 6	BLATT SHEET	17
VON OF		

FUSES SUPPORT

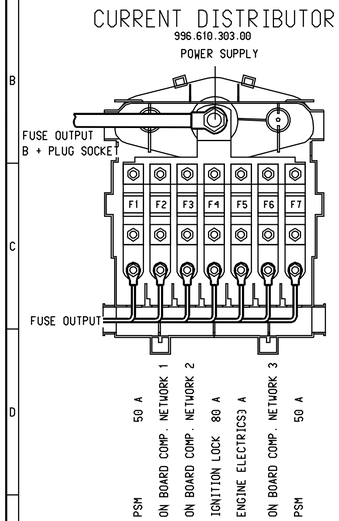

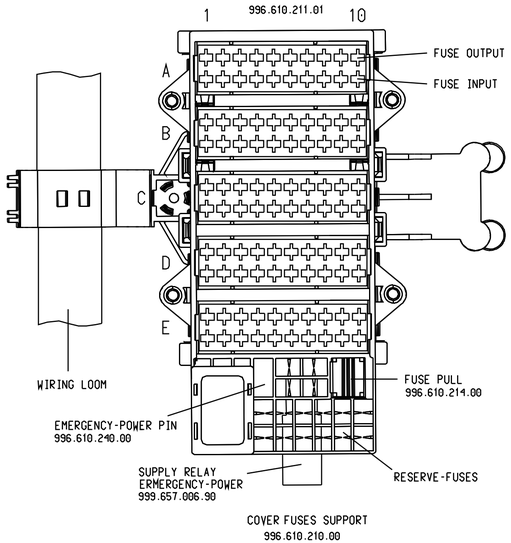

FUSES COLOR	VALUE	PORSCHE-NUMBER
LIGHT BROWN	5,0 A	999.607.004.00
BROWN	7,5 A	999.607.005.00
BLUE	15 A	999.607.007.00
WHITE	25 A	999.607.009.00
GREEN	30 A	999.607.010.00
ORANGE	40 A	999.607.017.00

FUSE HOLDER A

FUSE NO.	VALUE	DESIGNATION	M-NO.
SI A1	15 A	HIGH BEAM RIGHT HIGH BEAM CONTROL	
SI A2	15 A	HIGH BEAM LEFT	
SI A3	7,5 A	SIDE MARKER LIGHT RIGHT	
SI A4	7,5 A	SIDE MARKER LIGHT LEFT	
SI A5	15 A	LICENSE PLATE LIGHTS LOCATING LIGHT INSTRUMENT LIGHTING	
SI A6	25 A	SEAT HEATER	M139/M340
SI A7	25 A	FOG LIGHT, REAR FOG LIGHT	
SI A8	7,5 A	LICENSE PLATE LIGHTS CANADA	M113
SI A9	15 A	LOW BEAM RIGHT	
SI A10	15 A	LOW BEAM LEFT	

FUSE HOLDER B

FUSE NO.	VALUE	DESIGNATION	M-NO.
SI B1	15 A	CLUSTER TIPTRONIC BUTTON PSM PSM DIAGNOSIS POWER TOP	
SI B2	15 A	HAZARD-WARNING A.TURN-SIGNAL SYSTEM	
SI B3	25 A	TWO-TONE HORNS	
SI B4	15 A	ENGINE COMPARTMENT BLOWER	
SI B5	7,5 A	BACKUP LIGHT CU MEMORY MIRROR ADJUSTMENT CU POWER TOP	
SI B6	15 A	TURN SIGNALS POWER WINDOW	
SI B7	15 A	STOP LIGHT CRUISE CONTROL	
SI B8	7,5 A	CU ALARM-CL CU ME CU TIPTRONIC	M249
SI B9	15 A	CU ABS PSM	
SI B10	15 A	INSTRUMENT CLUSTERDIAGNOSIS HEADLIGHT VERTICAL AIM CONTROL	

FUSE HOLDER C

FUSE NO.	VALUE	DESIGNATION	M-NO.
SI C1	25 A	ENGINE ELECTRICS	
SI C2	30 A	IGNITION INJECTION HEATER OXYGEN SENSORS	
SI C3	15 A	CU ALARM-CL POWER WINDOW,SUN ROOF, CU POWER TOP INSIDE LIGHT	
SI C4	30 A	FUEL PUMP	
SI C5			
SI C6	25 A	WIPER	
SI C7	7,5 A	TERM.X CONTROL WIRES	
SI C8	40 A	RADIATOR FAN RIGHT	
SI C9	25 A	HEADLIGHT CLEANING SYSTEM	M288
SI C10	40 A	RADIATOR FAN LEFT	

FUSE HOLDER D

FUSE NO.	VALUE	DESIGNATION	M-NO.
SI D1	30 A	POWER WINDOW FRONT	
SI D2	30 A	REAR WINDOW DEFOGGER MIRROR HEATING	
SI D3	30 A	CONVERTIBLE TOP DRIVE SUN ROOF	
SI D4	30 A	POWER WINDOW REAR CABRIO	
SI D5	15 A	CIGAR LIGHTER	
SI D6	30 A	HEATER AIR CONDITIONING SYSTEM	
SI D7	15 A	REAR SPOILER COVER OPENER	
SI D8	7,5 A	RADIO	
SI D9	15 A	AUDIO OPTION PACK	M490
SI D10	7,5 A	TELEPHONE	

FUSE HOLDER E

FUSE NO.	VALUE	DESIGNATION	M-NO.
SI E1	7,5 A	TERM.86S/CU ALARM-CL / RADIO / CLUSTER/INFOSYSTEM / CU SENSOR OVERTURN / DAYTIME RUNNING LIGHT	
SI E2	7,5 A	CU MEMORY	M537/M538
SI E3	30 A	POWER SEAT CU MEMORY LEFT	M537
SI E4	30 A	POWER SEAT CU MEMORY RIGHT	M538
SI E5	7,5 A	INFOSYSTEM	M662
SI E6	7,5 A	TERM.30 TELEPHONE /HANDY NAVIGATION ORVR	M614/M618/M662
SI E7	7,5 A	AIR CONDITIONING SYSTEM	M573
SI E8	7,5 A	TERM.15 TELEPHONE /HANDY INFOSYSTEM	M614/M618/M662
SI E9	25 A	PSM	M476
SI E10	15 A	PSM	M476

FUSE HOLDER VARIOUS

FUSE NO.	VALUE	DESIGNATION	M-NO.
MF 1/1	40 A	MAXI FUSE SECONDARY AIR PUMP ON RELAY SUPPORT 2	M661
		LITTLE FUSE 999.607.011.00	

911 Turbo (996)
MODEL 2002 SHEET 20 FUSE CONNECTION

NR. NO.	FELD SECTION	DATUM DATE	GEAENDERT CHANGED	GENEHMIGT APPROVE	BESCHREIBUNG DER AENDERUNG UND TERMINSCHLUESSEL REVISION RECORD AND CHANGE DATE CODE

ZEICHNUNG NUR MIT CAD AENDERN

© BEI UEBERMITTLUNG SCHUTZFAEHIGER INFORMATIONEN BEHAELT SICH DIE PORSCHE AG
ALLE RECHTE FUER DEN FALL DER PATENTERTEILUNG VOR. JEDE VERFUEGUNGSBEFUGNIS, WIE KOPIER- UND WEITERGABERECHT, BEI UNS. GENEHMIGUNG VON ERSTELLERUNG UND AENDERUNG NACH VW DIT 55.
© IN CASE OF COMMUNICATING PATENTABLE INFORMATION ALL RIGHTS ARISING IN THE EVENT OF A PATENT GRANT REMAIN WITH PORSCHE AG
ALL RIGHTS OF DISPOSITION, PARTICULARLY FOR COPYING OR DISTRIBUTING, ARE RESERVED.
APPROVAL FOR INITIAL SUPPLY AND MODIFICATIONS ACCORDING TO VW DIT 55.
THE ENGLISH TRANSLATION IS BELIEVED TO BE ACCURATE. IN CASE OF DISCREPANCIES THE GERMAN VERSION SHALL GOVERN.

CAD-SYSTEM UND VERWALTUNGSSYSTEM-SCHLUESSEL / CAD-SYSTEM AND ADMINISTRATION CODE
PWS
TYP-PRUEF-DOK./TYPE-APPR.-DOC. ENT.-NR./LAYOUT NO. EA-NR./ENG PROJ.NO.

KONSTRUKTIONS-VERANTWORTUNG / DESIGN RESPONSIBILITY
NAME ABT./DEPT. TEL. GEZ./DRAWN

SICH.-DOK. / SAFETY DOC.: 20
BENENNUNG: FUSE ASSIGNMENT
TITLE: SICHERUNGSBELEGUNG
MASZSTAB / SCALE
TEIL-NR. / PART-NO.: 996.600.272.05
FORMAT / D.SIZE: A22
BLATT / SHEET: 20
VON / OF

RELAY SUPPORT 1

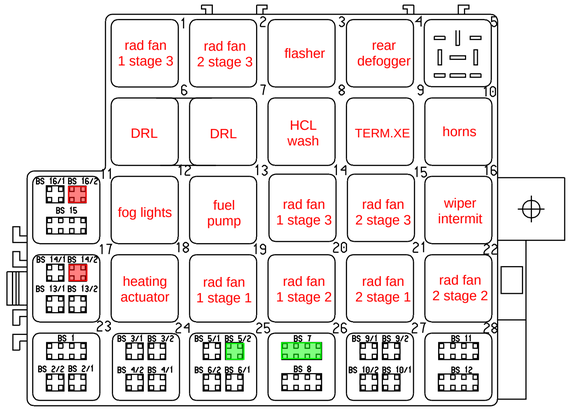

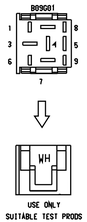

TERM	CONNECTION	TERM	CONNECTION
A	SPEEDO OUTPUT	55	LIGHT SWITCH POSITION II
P	IGNITION SWITCH POSITION	56a	HIGH BEAM/LOW BEAM
X	IGNITION SWITCH POSITION I - II	56b	
XE	TERM.X DISCHARGING	57	LIGHT SWITCH POSITION I
15	IGNITION SWITCH POSITION II/III	58	LIGHT SWITCH POSITION I - II
86s	IGNITION SWITCH POSITION I/II/III	58R	SIDE MARKER LIGHT RIGHT/LEFT
K	DIAGNOSIS K LEAD	58L	
KVA	FUEL CONSUMPTION INDICATOR	58d	INSTRUMENT LIGHTS LAMPS BULB/LED
30	PERMANENT POSITIVE	31d	INSTRUMENT LIGHTS MINUS POTENTIAL LED
31	GROUND	T_1	INJECTION SIGNAL
54	STOP LIGHT	Tn	ROTATIONAL SPEED SIGNAL
—	—	61	GENERATOR D+

RELAY

PLUG POSITION	DESIGNATION	PORSCHE-NO.	M-NO.	NOTE
1	RADIATOR FAN 1 STAGE 3	141.951.253 B		ONLY LHD
2	RADIATOR FAN 2 STAGE 3	141.951.253 B		ONLY LHD
3	FLASHER	191.953.227 D		
4	DEFOGGER REAR WINDOW/ MIRROR	996.615.111.00		
5	---	---		
6	CU DAYTIME RUNNING LIGHT	996.615.111.00	M606	DOUBLE RELAY
7	CU DAYTIME RUNNING LIGHT	---		
8	CU HEADLIGHT WASHING	996.618.103.00	M288	
9	TERM.XE	141.951.253 B		
10	TWO-TONE HORNS	141.951.253 B		
12	FOG LIGHT USA/JAPAN	141.951.253 B	M193 NICHT M606 /M553	
13	FUEL PUMP	996.615.101.00		
14	RADIATOR FAN 1 STAGE 3	141.951.253 B		ONLY RHD
15	RADIATOR FAN 2 STAGE 3	141.951.253 B		ONLY RHD
16	WIPER INTERMITTENT CONTROL	996.615.103.00	NICHT M265	
18	ACTUATION HEATING	141.951.253 B		
19	RADIATOR FAN 1 STAGE 1	141.951.253 B		
20	RADIATOR FAN 1 STAGE 2	141.951.253 B		
21	RADIATOR FAN 2 STAGE 1	141.951.253 B		
22	RADIATOR FAN 2 STAGE 2	141.951.253 B		

RELAY POTENTIAL DISTRIBUTOR BRIDGE PLUG

PLUG POSITION	NAME	COLOR	POTENTIAL	NAME	COLOR	POTENTIAL	
11	BS 16/1	BK/BN	TERM.15 FUSE B8	BS 16/2	BK/OG	TERM.15 FUSE B5	IGN II/III
11	BS 15	GY/BU/RD	TERM.58d LED		---		
17	BS 13/1	OG	TERM.86S FUSE E1	BS 13/2	NOT USED		
17	BS 15	BK/YE	TERM.X WIPER	BS 14/2	BK	TERM.15 STOP LIGHT	IGN II/III
23	BS 1/1	GY/PK	SPEEDOMETER A		---		
23	BS 2/1	BK/RD	TERM.15 FUSE B10	BS 2/2	NOT USED		IGN II/III
24	BS 3/1	NOT USED		BS 3/2	NOT USED		
24	BS 4/1	NOT USED		BS 4/2	NOT USED		
25	BS 5/1	WH	TERM.56a	BS 5/2	YE/BU/BN	TERM.31d LED	
25	BS 6/1	BN/YE	SIGNAL PARKING BRAKE	BS 6/2	BK/OG	TERM.54 STOP LIGHT	
26	BS 7	RD/BK	CONSUMER SWITCHED OFF		---		
26	BS 8	NOT USED			NOT USED		
27	BS 9/1	RD/BN	TERM.30 CLS	BS 9/2	RD/BK	TERM.30 FUSE B1	
27	BS 10/1	GY	TERM.58 FUSE A5	BS 10/2	YE	TERM.56 RIGHT	
28	BS 11	BN	TERM 31 GP 4				
28	BS 12	BN	TERM 31 GP 3				

RELAY SUPPORT 2

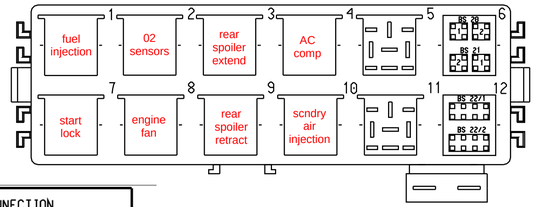

MAXI FUSE
ON M661

OG 40 AMP 999.607.011.00

RELAY POTENTIAL DISTRIBUTOR BRIDGE PLUG

PLUG POSITION	DESIGNATION	PORSCHE-NO.	M-NO.	NOTE
1	RELAY MFI+DI	141.951.253 B		
2	IGNITION / OXYGEN SENSORS	141.951.253 B		
3	SPOILER EXTENSION	996.615.102.00		
4	AIR CONDITIONING COMPRESSOR	964.615.215.00	M573	
5	---	---		
7	START LOCK START LOCK	141.951.253 B ---		
8	ENGINE COMPARTMENT BLOWER	996.615.102.00		
9	SPOILER RETRACTION	996.615.102.00		
10	SECONDARY AIR PUMP	993.615.115.00	M620+M661	
11	---	---		
6 BS 20/1	BK/BU BACKUP LIGHT			4 PINS
6 BS 20/2	---			
6 BS 21/1	BK OXYGEN SENSOR BEHIND CAT.			4 PINS
6 BS 21/2	BU/RD OXYGEN SENSOR BEHIND CAT.			
12 BS 22/2	BN TERM 31 GROUND			8 PINS
13	MAXI FUSE	999.607.011.00		OG. 40 A
	FOR SECONDARY AIR PUMP		M661	40 A

911 Turbo (996)

MODEL 2002 SHEET 21 RELAY SUPPORT/ASSIGNMENTS

NR. NO.	FELD SECTION	DATUM DATE	GEAENDERT CHANGED	GENEHMIGT APPROVE	BESCHREIBUNG DER AENDERUNG UND TERMINSCHLUESSEL REVISION RECORD AND CHANGE DATE CODE

ZEICHNUNG NUR MIT CAD AENDERN

© BEI UEBERMITTLUNG SCHUTZVERMERKER INFORMATIONEN BEHAELT SICH DIE PORSCHE AG ALLE RECHTE FUER DEN FALL DER PATENTERTEILUNG VOR. JEDE VERFUEGUNGSBEFUGNIS, WIE KOPIER- UND WEITERGABERECHT, BEI UNS. GENEHMIGUNG VON ERSTLIEFERUNG UND AENDERUNG NACH VW DIT 55.
© IN CASE OF COMMUNICATING PATENTABLE INFORMATION ALL RIGHTS ARISING IN THE EVENT OF A PATENT GRANT REMAIN WITH PORSCHE AG
ALL RIGHTS OF DISPOSITION, PARTICULARLY FOR COPYING OR DISTRIBUTING, ARE RESERVED.
APPROVAL FOR INITIAL SUPPLY AND MODIFICATIONS ACCORDING TO VW DIT 55.
THE ENGLISH TRANSLATION IS BELIEVED TO BE ACCURATE. IN CASE OF DISCREPANCIES THE GERMAN VERSION SHALL GOVERN.

CAD-SYSTEM UND VERWALTUNGSSYSTEM-SCHLUESSEL / CAD-SYSTEM AND ADMINISTRATION CODE
PWS

TYP-PRUEF-DOK./TYPE-APPR.-DOC. | ENT.-NR./LAYOUT NO. | EA-NR./ENG PROJ.NO. 2 PROGRAMM

KONSTRUKTIONS-VERANTWORTUNG / DESIGN RESPONSIBILITY

NAME	ABT./DEPT.	TEL.	GEZ./DRAWN
BORDNETZ	VERKABELUNG	EGE 23	

SICH.-DOK. SAFETY DOC.

BENENNUNG: RELAY CARRIER

21

TITLE: RELAISTRAEGER BRUECKENSTECKER

MASZSTAB SCALE

TEIL-NR. PART-NO. 996.600.273.05

FORMAT D.SIZE A22

BLATT SHEET 21

VON OF

CONSTRUCTION COMPONENTS

	LHD	RHD	
ALARM HORN	5bP	5bM	LEFT OF THE BATTERY
ANTENNA AMPLIFIER.	7bL	7bL	RIGHT ON THE A-PILLAR HEIGHT MIRROR OUTSIDE
OUTSIDE TEMP.SENSOR			ATTACHED TO RIB OF PV PART
STOP LIGHT SWITCH	6cP	6cL	BELOW THE DASHBOARD ON BRAKE PEDAL LINKAGE
BRIDGE PLUG	6cO	6cL	
DIAGNOSIS CONNECTION	6cO	6cO	LEFT BELOW THE DASHBOARD
ENGINE SPEED SENSOR	13cO	13cO	
THROTTLE VALVE SENSOR	11cO	11cO	
PRESSURE SWITCH AIR CONDITIONING SYSTEM	5bM	5bP	IN FRONT OF AIR CLEANER
TWO-TONE HORNS	1dM	1dM	ABOVE UNDERSIDE PANEL
BLOWER ENGINE COMPARTMENT	12cO	12cO	
BLOWER MOTOR RIGHT	3cL	3cL	UNDER MAIN HEADL. ON PV PART
BLOWER MOTOR LEFT	3cO	3cO	UNDER MAIN HEADL. ON PV PART
HALL SENSOR	12cM	12cM	
HYDRAULIC UNIT ABS	4cO	4cO	FRONT LUGGAGE COMPARTMENT LEFT
ABS/ABD HYDRAULIC UNIT	4cO	4cO	FRONT LUGGAGE COMPARTMENT LEFT
KICK-DOWN SWITCH	5cO	5cL	UNDER THE ACCELERATOR PEDAL
KNOCK SENSOR CYL.1-3	12cL	12cL	
KNOCK SENSOR CYL.4-6	12cO	12cO	
FUEL PUMP	5dO	5dO	IN THE TANK UNDER THE BATTERY
CLUTCH SWITCH CRUISE CONTROL	5dO	5dN	AT CLUTCH PEDAL
INSTRUMENT CLUSTER	6aB	6aB	
OXYGEN SENSOR CYL.1-3 UPSTR.CAT.	14dO	14dO	
OXYGEN SENSOR CYL. 3/6 UPSTR.CAT.	14dL	14dL	
OXYGEN SENSOR CYL.1-3 DOWNSTR.CAT.	16dO	16dO	
OXYGEN SENSOR CYL. 3/6 BEHIND CAT.	16dL	16dL	
IDLE SPEED POSITIONER	13cO	13cO	
MASS AIR FLOW SENSOR	13cO	13cO	
MICROSWITCH CONVERTIBLE TOP UNLOCK	9aO	9aO	AT WIND COURSE FRAME
MICROSWITCH LOCK CONVERTIBLE TOP	9aN	9aN	AT WIND COURSE FRAME
MICROSWITCH VDKD CLOSE	13bN	13bN	IN REAR LUGGAGE COMPARTMENT
MICROSWITCH CLOSED CONVERTIBLE TOP	12bO	12bO	B-PILLAR LEFT
NAVIGATION COMPUTER	6cO	6cO	
NTC TEMPERATURE FOR INTAKE AIR	--	--	
OIL PRESSURE SENSOR/ PRESSURE SWITCH	--	--	
OIL LEVEL SENSOR	--	--	
OIL TEMPERATURE SENSOR	--	--	
VALVE ORVR	5cO	--	
SWITCH LIFTING	15dN	15dN	ON GEARBOX
PEDAL VALUE SENSOR	5dP	5dM	
AC COMPRESSOR RELAY	13cN	13cN	BEHIND SEAT WELL
RELAY FLASHER	6cO	6cL	FOOTWELL LEFT ON RELAY SUPPORT 1
RELAY MFI	15bO	15bO	BEHIND SEAT WELL ON RELAY SUPPORT 2
FUEL PUMP RELAYS	6cO	6cL	FOOTWELL LEFT ON RELAY SUPPORT 1
ELECTRIC TOP RELAY	6cO	6cL	FOOTWELL LEFT ON RELAY SUPPORT 1 DOUBLE RELAY
TWO-TONE HORNS RELAY	6cO	6cL	FOOTWELL LEFT ON RELAY SUPPORT 1
REL. ACTUATION HEATING	6cO	6cL	FOOTWELL LEFT ON RELAY SUPPORT 1
REL. RADIATOR FAN 1 STAGE 1	6cO	6cL	FOOTWELL LEFT ON RELAY SUPPORT 1
REL. RADIATOR FAN 1 STAGE 2	6cO	6cL	FOOTWELL LEFT ON RELAY SUPPORT 1
REL. RADIATOR FAN 2 STAGE 1	6cO	6cL	FOOTWELL LEFT ON RELAY SUPPORT 1
REL. RADIATOR FAN 2 STAGE 2	6cO	6cL	FOOTWELL LEFT ON RELAY SUPPORT 1
RELAY TERM.X	6cO	6cL	FOOTWELL LEFT ON RELAY SUPPORT 1
RELAY COMPARTMENT BLOWER ENGINE	13cN	13cN	BEHIND SEAT WELL ON RELAY SUPPORT 2
FOG LIGHT SWITCH OFF USA/JAPAN	6cO	6cL	FOOTWELL LEFT ON RELAY SUPPORT 1
REL. SECONDARY AIR PUMP	13cN	13cN	BEHIND SEAT WELL ON RELAY SUPPORT 2
RELAY MIRROR- REAR WINDOW DEFOGGER	6cO	6cL	FOOTWELL LEFT ON RELAY SUPPORT 1
REL. SPOILER EXTENSION	13cN	13cN	BEHIND SEAT WELL ON RELAY SUPPORT 2
REL. SPOLIER RETRACTION	13cN	13cN	BEHIND SEAT WELL ON RELAY SUPPORT 2
RELAY START LOCK	13cN	13cN	BEHIND SEAT WELL ON RELAY SUPPORT 2

CONSTRUCTION COMPONENTS

	LHD	RHD	
DAYTIME RUNNING LIGHT RELAY	6cO	6cL	FOOTWELL LEFT ON RELAY SUPPORT 1
RELAY HCS	6cO	6cL	FOOTWELL LEFT ON RELAY SUPPORT 1
WIPER INTERMITTENT CONTROL RELAY	6cO	6cL	FOOTWELL LEFT ON RELAY SUPPORT 1
RELAY IGNITION AND OXYGEN SENSORS	13cN	13cN	BEHIND SEAT WELL
BACKUP LIGHT SWITCH	14dN	14dN	ON GEARBOX
WINDSHIELD WASHING FLUID PUMP	6dO	6dO	ON WASHER TANK REAR
SECONDARY AIR PUMP	12bM	12bM	
FUSES SUPPORT	6dO	6dL	ON THE A-PILLAR IN FOOTWELL
PREDETERMINED MELTING AREAS	6cN	6cN	PASSENGER'S FOOTWELL
HEADLIGHT CLEANER PUMP	6dO	6dO	WINDSHIELD WASHER PUMP
STARTER	13cN	13cN	ON ENGINE
CONTROL UNIT ABS	4cO	4cO	FRONT LUGGAGE COMPARTMENT LEFT
CONTROL UNIT AIRBAG	7dN	7dN	FLOOR PANEL CENTER CONSOLE
CONTROL UNIT ALARM SYSTEM/CENTRAL LOCKING SYSTEM	19bP	19bP	UNDER THE DRIVER SEAT
CONTROL UNIT AHVAC	6cM	6cP	FRONT LUGGAGE COMPARTMENT
CONTROL UNIT MFI	15cP	15cP	IN REAR LUGGAGE COMPARTMENT
CONTROL UNIT HEATING, AIR CONDITIONING	6bO	6bO	IN CONTROL UNIT
CONTROL UNIT TIPTRONIC	11dL	11dO	B-PILLAR
LIGHTS ON BUZZER	6bP	6bP	IN CLUSTER
FILLING DETECTION	6bL	--	
FUEL LEVEL SENSOR	5dO	5dO	IN THE TANK UNDER THE BATTERY
TANK VENTING VALVE	6cK	6cK	
AMPLIFIER	6bN	6bN	FRONT LUGGAGE COMPARTMENT

911 Turbo (996)

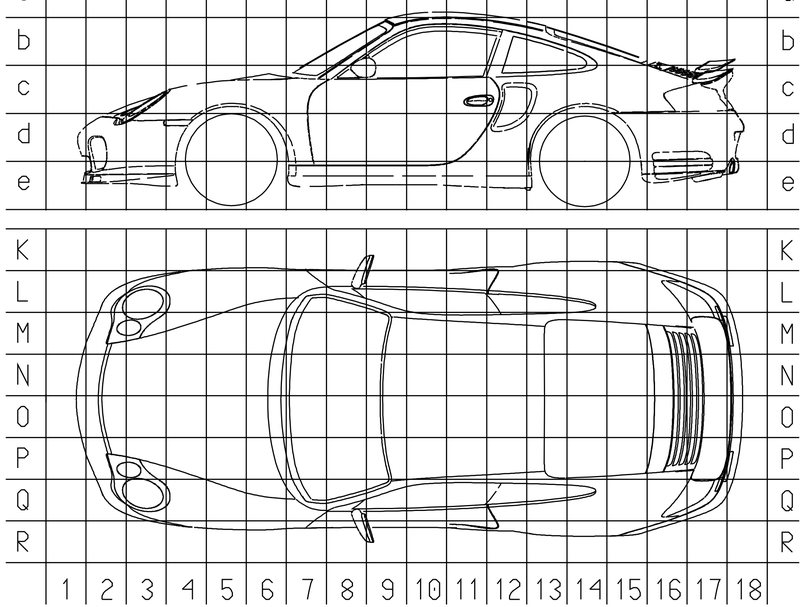

MODEL 2002 SHEET 22 CONSTRUCTION COMPONENTS

NR. NO.	FELD SECTION	DATUM DATE	GEAENDERT CHANGED	GENEHMIGT APPROVE	BESCHREIBUNG DER AENDERUNG UND TERMINSCHLUESSEL REVISION RECORD AND CHANGE DATE CODE

© BEI UEBERMITTLUNG SCHUTZFAEHIGER INFORMATIONEN BEHAELT SICH DIE PORSCHE AG ALLE RECHTE FUER DEN FALL DER PATENTERTEILUNG VOR. JEDE VERFUEGUNGSBEFUGNIS, WIE KOPIER- UND WEITERGABERECHT, BEI UNS.
© IN CASE OF COMMUNICATING PATENTABLE INFORMATION ALL RIGHTS ARISING IN THE EVENT OF A PATENT GRANT REMAIN WITH PORSCHE AG ALL RIGHTS OF DISPOSITION, PARTICULARLY FOR COPYING OR DISTRIBUTING, ARE RESERVED.

CAD-SYSTEM UND VERWALTUNGSSYSTEM-SCHLUESSEL / CAD-SYSTEM AND ADMINISTRATION CODE
PWS

TYP-PRUEF-DOK./TYPE-APPR.-DOC. | ENT.-NR./LAYOUT NO. | EA-NR./ENG.PROJ.NO. 2-PROGRAMM

KONSTRUKTIONS-VERANTWORTUNG / DESIGN RESPONSIBILITY

NAME	ABT./DEPT.	TEL.	GEZ./DRAWN
BORDNETZ	VERKABELUNG	EGE 23	

SICH.-DOK. SAFETY DOC. 22

BENENNUNG: BAUTEILE

TITLE: COMPONENTS

MASSTAB SCALE

TEIL-NR. PART-NO. 996.600.274.05

FORMAT D.SIZE A22

BLATT SHEET 22

VON OF

CODE	NUMBER OF PINS	DESIGNATION, FUNCTION	POSITION IN VEHICLE	NOTE	FIELD IN WIRING DIAGRAM
X 1/1	21	CONNECTION WL PASSENGER COMPARTMENT/WL FRONT END LEFT		IN LUGGAGE COMPARTMENT FRONT LEF WHITE	1/d7. 2/b7. 3B/b3. 8/c3. c14. 8A/e3. 12/b15. 22/d3
X 1/3	4	DISCONNECTING POINT FRONT END LEFT / FRONT END RIGHT	2GM	BLACK	1/c4
X2/3	30	CONNECTION WL PASSENGER COMPARTMENT/WL REAR	11GO	BLACK	1/d8. 8/e13. 8A/e13. 12/b6. b7. b8. b11. c7. c8. d4. d14 124/b6. d17. 13B/e3. 22/e8
X2/4	30	CONNECTION WL PASSENGER COMPARTMENT/WL REAR	11GO	WHITE	1/14. c15. c16. c17. 2A/c4. 5/b5. 5B/b4. 8/e13. 10/d8. 10A/c3. c5. d5. 12/c14. 14/c3. 22/e8
X2/5	30	CONNECTION WL PASSENGER COMP. / WL REAR	11GL	BLACK	1/b1. 3/c2. 3A/c2. 4A/d8. 10/d8. 10A/c4. 12/b5. b7. b8. b10. b11. d7. 124/b6. 22/b8
X2/7	21	CONNECTION WL PASSENGER COMP. / WL REAR	11GO	BLACK	6A/c2. d1. d2. d5. 22/e8
X10	6	CONNECTION AUXILIARY FRAME / REAR	12GO	BLACK	6A/b9. c5
X11	46	CONNECTION WL PASSENGER COMPARTMENT.DOOR LEFT	6GO	BLACK	5/b4. c4. d2. d4. 5A/c7. c8. c9. 5B/c3. d3. 5C/e10. c11. 7/c2. 8/c4. 8A/c5. 9/d3. 9A/d2. 13A/c4. 13B/d5. 22/e5
X12	46	CONNECTION WL PASSENGER COMPARTMENT.DOOR RIGHT	6GL	WHITE	5/c6. d6. 5A/c11. 5B/b5. c5. d5. d7. 5C/b8. c7. c9. 7/c4. 8/c13. 9/b2. 9A/d3 13A/c4. 13B/d5. 22/e5
13	2	CONNECTION WL REAR / AUXILIARY FRAME	12GO	BLUE	6A/b9
X16	22	CONNECTION WL PASSENGER COMPARTMENT/SEAT LEFT	9GP	BLACK	9D/b8. c1. 9/d4. 9A/d4
X17	22	CONNECTION WL PASSENGER COMPARTMENT/SEAT RIGHT	9GM	BLACK	9D/b8.c4. 9/d5. 9A/d3. d4
X23	12	CONNECTION ENGINE HOOD / REAR	16rM	BLACK	12/b15
X25	12	CONNECTION WL PASSENGER COMPARTMENT/WL CONVERTIBLE TOP	11GO	BLACK	6A/b8. b9. b10. b11
X59/1	25	CONNECTION WL MOTOR/WL REAR	16GL	BLACK	4A/b8. 12/c2. 12A/b4. b5. b7. c17. e2
X59/2	25	CONNECTION WL MOTOR/WL REAR	11GL	BLACK	12A/b5. b6. b7. b16. c17. e6
—	—	—	—	—	—
DP TERM.30	1	CURRENT DISTRIBUTOR	1GP	BLACK	12/c10
PLUG X	10	CONNECTION AIR CONDITIONING CONTROL / PLUG X	7GN	BLACK	4A/d4
PLUG Y	12	CONNECTION AIR CONDITIONING CONTROL / PLUG Y	7GN	BLACK	4A/d5
DP AIRBAG	2	DP AIRBAG DRIVERS	8GP	ORANGE	9/d6. 9A/e5
DP HARDTOP	2	DP HARDTOP/ ON AUXILIARY FRAME	12GO	BLACK	6A/e6
DP LICENSE PLATE LIGHTS	2	DP LICENSE PLATE LIGHTS/ REAR	18GO	BLACK	1/b16. 14/d4. 22/c12
—	—	—	—	—	—
—	—	—	—	—	—
—	—	—	—	—	—
—	—	—	—	—	—
—	—	—	—	—	—

CODE	MEANING	CODE	MEANING	CODE	MEANING
AAV	CARBON CANISTER SHUTOFF VALVE	HA	REAR AXLE	POTI	POTENTIOMETER
ABD	AUTOMATIC BRAKE DIFFERENTIAL	HF	HIGH FREQUENCY	PSM	PORSCHE STABILITY MANAGEMENT
ABS	ANTILOCK BRAKING SYSTEM	HFM	HOT-FILM AIR MASS METER	RDK	TIRE PRESSURE CONTROL
AC	AIR CONDITIONING SYSTEM	HL	REAR LEFT	RDW	REST OF WORLD
AGR	EXHAUST GAS RECIRCULATION	HR	REAR RIGHT	RFL	BACKUP LIGHT
ALWR	HEADLIGHT VERTICAL AIM CONTROL	KL	TERMINAL	RL	RIGHT-HAND DRIVE
ASR	ANTI-SKID REGULATOR	KLS	COMBINED STEERING COLUMN SWITCH	SA	SAUDI ARABIA
ATF	OUTSIDE TEMP.SENSOR	KS	WIRING LOOM	SG	CONTROL UNIT
BKV	BRAKE BOOSTER	KVA	FUEL CONSUMPTION INDICATOR	SI	FUSE
BS	BRIDGE PLUG	LED	LIGHT-EMITTING DIODE	SILA	SAFETY LAMP
BVA	BRAKE PAD WEAR DISPLAY	LL	LEFT-HAND.DRIVE	RA	HEADLIGHT CLEANING SYSTEM
CAN	SERIAL DATA TRANSFER	LWR	HEADLIGHT VERTICAL AIM CONTROL	ST	PLUG
CLOCK	CLOCK SIGNAL	ME	MOTRONIK WITH ELECTRON. THROTTLE CONTROL	TC	TRACTION CONTROL
DATA	DATA SIGNAL	MMI	ENGINE ACTUAL IMPULSE	TEL.MUTE	RADIO MUTING CONTROL
DF	SPEED SENSOR	MNR	ENGINGE NOMINAL IMPULSE	TI	INJECTION TIME
DFA	ENGINE-SPEED SENSOR OUTPUT	MP	GROUND POINTS	TN	ENGINE SPEED
DG	ENGINE SPEED SENSOR	NF	LOW FREQUENCY	TS	DISCONNECTING POINT
DK	THROTTLE VALVE	NL	FOG LIGHT	VA	FRONT AXLE
EDS	ELECTRONIC DIFFERENTIAL LOCK	NR	NUMBER	VDKO	LID / CONVERT: TOP HOUSING
EKP	ELEC.FUEL PUMP	NSL	REAR FOG LIGHT	VL	FRONT LEFT
DKG	THROTTLE VALVE SENSOR	NTC	NEGATIVE TEMPERATURE COEFFICIENT	VR	FRONT RIGHT
DME	DIGITAL ENGINE ELECTRONICS	OBVR	FUEL VAPOUR EXTRACTION	VS	CONNECTING POINT
EV	GROUND FUEL INJECTORS	PIN	PIN	WW	WORLDWIDE
FH	POWER WINDOW	—	—	ZK	IGNITION CIRCUIT
GND	GROUND	—	—	ZV	CENTRAL LOCKING SYSTEM
NICHT	NOT	—	—	—	—
VS/SP	WELDING POINT	—	—	—	—
BS	BRIDGE PLUG	—	—	—	—
—	—	—	—	—	—
—	—	—	—	—	—
—	—	—	—	—	—

M - NUMBERS		M - NUMBERS	
M139	ADJUSTABLE SEAT HEATING, LEFT SEAT		
M153	JAPAN VERSION	M534	ANTI-JOY RIDE DEVICE SYSTEM
M240	AUTOMATIC TRANSMISSION TIPTRONIC	M535	ANTI-JOY RIDE DEVICE SYSTEM USA
M273	OUTSIDE MIRROR POWER ADJUSTABLE	M536	ALARM SIREN TILT SENSOR
M288	HEADLIGHT CLEANING SYSTEM	M537	SEAT MEMORY LEFT
M388	REAR-DRIVE	M538	SEAT MEMORY RIGHT
M399	FOG - DRIVE	M560	HARDTOP
M340	ADJUSTABLE SEAT HEATING, RIGHT SEAT	M653	USA / CANADA VERSION
M405	REAR WINDOW WIPER.	M673	AIR CONDITIONING SYSTEM
M417	COMFORT SEAT,LEFT	M601	XENON-HEADLIGHT
M418	COMFORT SEAT RIGHT	M606	CANADA VERSION(DAYTIME RUNNING LIGHT)
M429	POWER TOP	M618	HANDY
M441	RADIO PREPARATION	M635	PARKING ASSISTANT
M464	CRUISE CONTROL	M651	POWER WINDOWS
M465	REAR FOG LIGHT LEFT	M659	ON-BOARD COMPUTER
M466	REAR FOG LIGHT RIGHT	M660	OBD II
M475	PORSCHE STABILITY MANAGEMENT (PSM)	M661	SIFICIER EMISSIONS CONCEPT
M476	ABS	M662	INFO.NAVI.COMPUTER
M481	5-RANGE-TRANSMISSION	M664	DRVR
M490	AUDIO OPTION PACK HARMAN ANALOG	M680	AUDIO OPTION PACK BOSE ANALOG
—	—	M692	CD - CHANGER
—	—	M620	MOTRONIC ME 7.8
—	—	—	—
—	—		
—	—		

TERM	CONNECTION	TERM	CONNECTION
A	SPEEDO OUTPUT	56	LIGHT SWITCH POSITION II
P	IGNITION SWITCH POSITION	56a	HIGH BEAM/LOW BEAM
X	IGNITION SWITCH POSITION I - II	56b	
KE	TERM.X DISCHARGING	57	LIGHT SWITCH POSITION I
15	IGNITION SWITCH POSITION II/III	58	LIGHT SWITCH POSITION I - II
15a	IGNITION SWITCH POSITION I/II/III	58d	SIDE MARKER LIGHT RIGHT/LEFT
K	DIAGNOSIS K LEAD	58L	
KVA	FUEL CONSUMPTION INDICATOR	58d	INSTRUMENT LIGHTS LAMPS BULB/LED
30	PERMANENT POSITIVE	31d	INSTRUMENT LIGHTS RINGS POTENTIAL LED
31	GROUND	TI	INJECTION SIGNAL
54	STOP LIGHT	TN	ROTATIONAL SPEED SIGNAL
—	—	61	GENERATOR D+

911 Turbo (996)

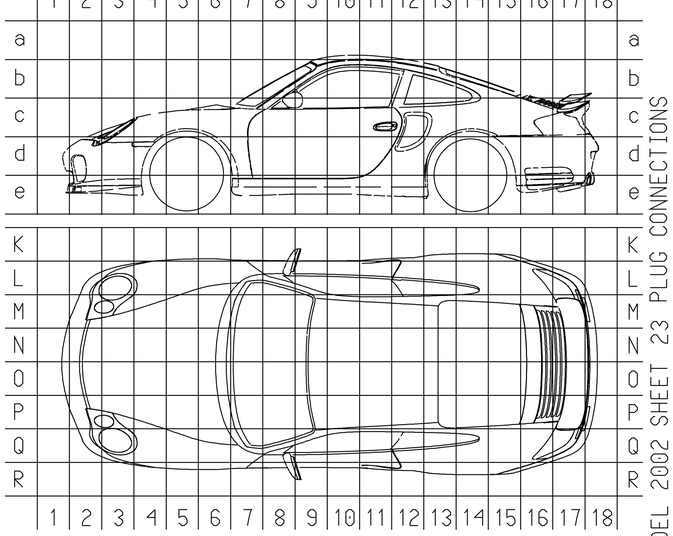

MODEL 2002 SHEET 23 PLUG CONNECTIONS

NR. NO.	FIELD SECTION	DATUM DATE	GEANDERT CHANGED	GENEHMIGT APPROVE	BESCHREIBUNG DER ÄNDERUNG UND TERMINSCHLUESSEL REVISION RECORD AND CHANGE DATE CODE

ZEICHNUNG NUR MIT CAD AENDERN

(D) BEI VERÖFFENTLUNG SONSTIGER INFORMATIONEN BEHÄLT SICH DIE
(A,G) ALLE RECHTE FÜR DEN FALL DER PATENTERTEILUNG VOR. JEDE VERFÜGUNGSBEFUGNIS. WIE KOPIER- UND WEITERGABERECHT BEI UNS.
(E) IN CASE OF COMMUNICATING PATENTABLE INFORMATION ALL RIGHTS ARISING IN THE EVENT OF A PATENT GRANT REMAIN WITH
(A,G) ALL RIGHTS OF DISPOSITION, PARTICULARLY FOR COPYING OR DISTRIBUTING, ARE RESERVED.

CAD-SYSTEM UND VERWALTUNGSSYSTEM-SCHLUESSEL / CAD-SYSTEM AND ADMINISTRATION CODE
V O B E S Version: 2.3.1

TYP-PRUEF-DOC./TYPE-APPR.-DOC. | EAN-NR./ENG.PROJ.NO. 2-PROGRAMM | ENT.-NR./LAYOUT NO.

KONSTRUKTIONS-VERANTWORTUNG / DESIGN RESPONSIBILITY

NAME	ABT./DEPT.	TEL.	GEZ./DRAWN
BORONITZ	VERKABELUNG	EGE 23	

SICH.-DOC. / SAFETY DOC. | BENENNUNG

STECKVERBINDUNGEN

23 | TITLE

CONNECTORS

MASSSTAB SCALE | TEIL-NR. PART-NO. 996.600.275.05 | FORMAT A23 D.SIZE | BLATT SHEET 23 | VON OF

WELDING POINT CP NO.	WIRE COLOR	WL PASSENGER COMPARTMENT DESIGNATION, FUNCTION	LHD	RHD	SEE SHEET / FIELD NO.
CP 1	BN	GROUND	7cP	7cM	
			7cP	7cM	
CP 4	BN	GROUND	7cP	7cM	
CP 5	BN	GROUND POINT 9	1-9L	1-9L	17/b12
CP 6	BN	GROUND	7cP	7cM	6A/d6,17/a12,b5,17A/a12,d5
CP 7	BN	GROUND	10dP	10dP	17/d9
CP 9	BN	GROUND POINT 4	7cP	7cM	12A/c4,17/c5
CP 10	BN	GROUND DU AIRBAG	7cN	7cN	9/b5,9A/c4,12A/d14
CP 17	RD/BK	FUSE B1	7cO	7cL	16/d7
CP 18	RD/GN	INFOSYSTEM	7cM	7cP	15/b6
CP 19	BN	INFOSYSTEM	7cM	7cP	15/c5
CP 20	GY/BU/RD	TERM.58d LIGHTS INFO,NAVI,COMPUTER	7cM		15/c5
CP 21	BK/BU	BACKUP LIGHT	9aP		1/d16,1A/d16,12A/e5
CP 22	WH/BK	TERM.56	7bO	7bL	1/c12
CP 24	GN/RD	DRYER	7cM		
CP 27	RD/GN	FUSE EBERM.30	7cO	7cL	16/d12
CP 28	GN/BK	FUSE EBERM.15	7dO	7dO	16/d10
CP 30	GN/RD	FUSE EBERM.30	7cM		12/c13
CP 31	YE/WH	FOG LIGHT ROW	7cO	7cL	1/c13
CP 32	YE/WH	FOG LIGHT USA/JAPAN	7cO	7cL	1A/c10
CP 33	BK/WH	TURN SIGNALS LEFT	7cO	7cO	1/c13,1A/c14
CP 34	BK/GN	TURN SIGNALS RIGHT	7cO	7cO	1/b13,1A/b13
CP 35	GY	TERM.58	7eO		1/d9,1A/d9,12/c4
CP 36	GY/RD	SIDE MARKER LIGHT	6cL		1A/c6
CP 37	BN/GN	BRAKE PAD WEAR DISPLAY	7cM	7cM	10/d7,10A/c3
CP 38	BN/BK	BRAKE PAD WEAR DISPLAY	7cM	7cM	10/d7,10A/c3
CP 42	GY/BU	TERM.58d,AMP BULB	7cM	7cP	2/d9
CP 44	BK/BN	TERM.15 ETC	7cO		11/b5
CP 46	BK	CAN KOMFORT LOW	7cP	7cM	4A/d5,10/d9,10A/c5
CP 47	YE	CAN KOMFORT HIGH	7cP		4A/d5,10/d9,10A/c5
CP 49	BK/YE	TERM.XE	7cP	7cL	3/c6,3A/c5
CP 51	BN/VT	CONVERTIBLE TOP UNLOCK LOCKING	7dO		6A/d11
CP 53	BN/BK	BRAKE PAD WEAR DISPLAY FL	7cO	7cO	10/d7,10A/c3
CP 54	BN/GN	BRAKE PAD WEAR DISPLAY FL	7cO	7cO	10/d7,10A/c3,12/c11
CP 55	BN	GROUND FL	7cO	7cO	10/d6,10A/c3
CP 56	BN	GROUND FR	7cM	7cM	10/d7,10A/c3
CP 57	BK/GN	POTI WIPER INTERMITTENT CONTROL	7cO		3/c6
CP 61	GY/GN	TERM.87 REAR WINDOW DEFOGGER	7cO	7cL	5/c5,5B/c4
CP 65	BK/GY	TERM.87 RELAY HEATER LAMP	7cP	7cP	4A/d6
CP 68	BN/GN	GROUND GLOVE BOX	10eO		8/d9,8A/d9
CP 69	GY	EXTERNAL ELECTRONICS	9eO		8/b7,8A/b7
CP 72	GY/WH	EXTERNAL ELECTRONICS	7cO		8/b4,8A/b4
CP 73	BN/YE	INSIDE LIGHT	9eO	9eO	8/c8,8A/c8
CP 74	BN/GN/WH	DOOR CONTACT DRIVER'S SIDE	7cR		8/c8
CP 75	BU/WH/BN	DOOR LOCKED	10eO		8/c7
CP 76	BN/RD	DOOR OPEN	10eO	9eO	8/c8,8A/c8
CP 77	BN/WH	PRIME ALARM SYSTEM	7cP	9eO	8/b7,8A/b7
CP 78	RD/BK	CONSUMER SWITCHED OFF	7dO		8/c11,8A/c11
CP 79	RD/BK	MAKE UP MIRROR	9aP	9aP	8/d11,8A/d11
CP 80	BN	TERM 31 MAKE UP MIRROR	9aP		8/d10,8A/d10
CP 81	GN/RD	ZV MOTOR UP	7dO	9eO	8/c8,8A/c8
CP 82	BU/YE	ZV MOTOR CLOSE	7dO	9eO	8/c8,8A/c8
CP 85	OG	TERM.86S	7dO		16/d11
CP 88	WH/BN	ESO REAR	7cP		
CP 90	OG/BU	K LEAD 2	6cO	6cO	12/d12
CP 91	OG/BU	K LEAD 2	6cO	6cO	12/d12
CP 95	BN	TERM 31 AMPLIFIER	6cP		
CP 96	RD/BU	TERM.30 AMPLIFIER	6cP		
CP 100	RD/BU	MFI+DI PASSENGER COMPARTMENT	6cO		12/d16
CP 117	OG	AIRBAG-MRS	7cO		9/d8 9A/d8
CP 119	RD/WH	CURRENT DISTRIBUTOR F4	7cP	7cM	16/b4
CP 120	RD	CURRENT DISTRIBUTOR F2	7cP	7cM	16/b2
CP 121	RD	CURRENT DISTRIBUTOR F2	7cP	7cM	16/b9
CP 122	BK/YE	FUSE C4 TERM.	7dO		16/d7
CP 123	BK/YE	TERM.X	7cP	7cM	
CP 124	BK	TERM.15	8dO		
CP 125	RD/BU	CURRENT DISTRIBOTOR F3	8dO		
CP 128	RD/GY	FUSE D4 TERM.30	8dO		16/c8
CP 129	BK/RD	FUSE B10 TERM.15	7dO	7cL	16/d5
CP 130	RD	TERM.30 DAYTIME RUNNING LIGHT	7dO		16/b2
CP 131	RD/GY	TERM.30	6cO		
CP 132	BK	FUSE B6 TERM.15	7dO	7cL	16/d5
CP 133	BK/YE	TERM.X DAYTIME RUNNING LIGHT	7cO		16/c8
CP 135	GY	FDR SENSOR	7cO		10A/d2
CP 136	BU	FDR SENSOR	7cO		10A/d2
CP 141	BN/WH	TERM.ABS SPEED SENSOR FL	6cP	6cP	10/d4,10A/c2

WELDING POINT CP NO.	WIRE COLOR	WL PASSENGER COMPARTMENT DESIGNATION, FUNCTION	LHD	RHD	SEE SHEET / FIELD NO.
CP 142	BN/BU	GROUND ABSSPEED SENSOR FL	6cP	6cP	10/d4,10A/c2
CP 143	BN/WH	TERM.ABS SPEED SENSOR FR	6cP	6cP	10/d5,10A/c3
CP 144	BN/BU	GROUND ABSSPEED SENSOR FR	6cP	6cP	10/d5,10A/c3
CP 145	BU	AHVAC SENSOR FRONT LEFT	6cO		1/b8,1A/b8
CP 146	RD/WH	AHVAC SENSOR FRONT LEFT +5 VOLT	6cO		1/b8,1A/b8
CP 147	BN/BK	ALWR GROUND FL	6cO		1/b8,1A/b8
CP 148	GY/BN	PSM TERM 31	7cP		10A/c2
CP 149	GY/RD	PSM E BATTERIE	7cP		10A/c2
CP 153	BN/GN/BK	POWER WINDOWS	11gN	11gN	7/c3
CP 154	YE/GY	POWER WINDOWS	7dO	7dO	7/c3
CP 157	RD/GN	WAKE UP	6cN		13A/b4
CP 161	BN/BK	ELECTR.MIRROR MEMORY	8eO		5A/e9
CP 162	RD/BK	ELECTR.MIRROR MEMORY	8eO		5A/d9
CP 163	WH	ELECTR.MIRROR MEMORY	8eO		
CP 164	BU/RD	ELECTR.MIRROR MEMORY		9eL	
CP 165	WH/YE	ELECTR.MIRROR MEMORY		9eL	
CP 166	WH	ELECTR.MIRROR MEMORY		9eL	
CP 800	YE	OUTSIDE MIRROR	9aP		5/c4,5B/c5
CP 801	GN	OUTSIDE MIRROR	9aP		5/c4,5B/c5
CP 905	BU	SPEAKER REAR	7cP		13B/e5
CP 906	BN/BU	SPEAKER REAR	7cP		13B/e5
CP 960	WH/BN	MORE BELT-TAUTLY PASSENGER	8eL		
CP 961	WH/GN	MORE BELT-TAUTLY PASSENGER	8eL		
CP 962	WH/YE	MORE BELT-TAUTLY DRIVER	8eO		
CP 963	WH/BK	MORE BELT-TAUTLY DRIVER	8eO		
CP 976	BN	TERM 31	5cL		
CP 983	SHIELD	SHIELD MICROPHONE	6cN		
CP 987	BU	SWITCHING OUTPUT	6cN		
CP 1005	BN/WH	SUBWOOFER	5cP		13B/d2
CP 1006	WH	SUBWOOFER POSITIVE	5cP		13B/d3

WELDING POINT	WL REAR	LHD	RHD	SEE SHEET / FIELD NO.
CP 1 BN	TERM 31	13dO		
CP 2 BN	TERM 31	13dO		
CP 2.1 BN	TERM 31	13dO		
CP 5 BN	M620	13dN		
CP 6 BN		13dN		
CP 12 BN/RD/BK	ENGINE HOODSWITCH	13dO		
CP 13 BK/OG	STOP LIGHT	11dO		1/b16,1A/c17
CP 21 RD/VT	+5V PEDAL VALUE SENSOR	12dO		1/d16,1A/d16,12A/e5
CP 26 RD/BU	TERM.87 MFI+DI REAR	14cP		12/c5
CP 35 RD/GN	TERM.30	14cP		1/d9,1A/d9,12/c4
CP 46 BN/BK	BRAKE PAD WEAR DISPLAY RR	11dO		4A/d5,10/d9,10A/c5
CP 47 BN/GN	BRAKE PAD WEAR DISPLAY RR	11dO		4A/d5,10/d9,10A/c5
CP 48 BN	TERM 31 WHEEL SENSOR RR	11dO		10/d9,10A/c5
CP 54 VT/GN	TN-SIGNAL	12dO		10/d7,10A/c3,12/c11

WELDING POINT	WL MOTOR	LHD	RHD	SEE SHEET / FIELD NO.
CP 2 BK	IGNITION	15cL		
CP 3 BN/BK	GROUND SENSORS	15cL		
CP 8 RD/VT	+5V SUPPLY MFI+DI	15cL		
CP 9 RD/BU	TERM.30 VALVES	15cL		
CP 10 BK	TERM.15E FUEL INJECTORS	15cL		
CP 32 BN/OG	OIL LEVEL SENSOR	15cL		

WELDING POINT	WL DOOR LEFT	LHD	RHD	SEE SHEET / FIELD NO.
CP 2 BN	GROUND	9cO		8/c3, 8A/c3
CP 3 BN/GN	DOOR CONTACT	9cO		8/c4, 8A/c4
CP 4 BU/WH/BN	DOOR LOCKED	9cO		8/c4, 8A/c4

WELDING POINT	WL DOOR RIGHT	LHD	RHD	SEE SHEET / FIELD NO.
CP 2 BN	GROUND	9cL		8/c14, 8A/c14
CP 3 BN/GN	DOOR CONTACT	9cL		8/c14, 8A/c14
CP 4 BU/WH/BN	DOOR LOCKED	9cL		8/c14, 8A/c14

WELDING POINT	WL FRONT END LEFT	LHD	RHD	SEE SHEET / FIELD NO.
CP 2 BN	TERM 31	6cO		17/b2

WELDING POINT	WL TÄRGA	LHD	RHD	SEE SHEET / FIELD NO.
CP 1 BN	GROUND			6B/b6

BLACK	SW	BK
BROWN	BR	BN
RED	RT	RD
ORANGE	OR	OG
YELLOW	GE	YE
GREEN	GN	GN
BLUE	BL	BU
VIOLET	VI	VT
GREY	GR	GY
WHITE	WS	WH
PINK	RS	PK
GOLD	—	GD
TURKIS	TK	TQ
SILBER	—	SR

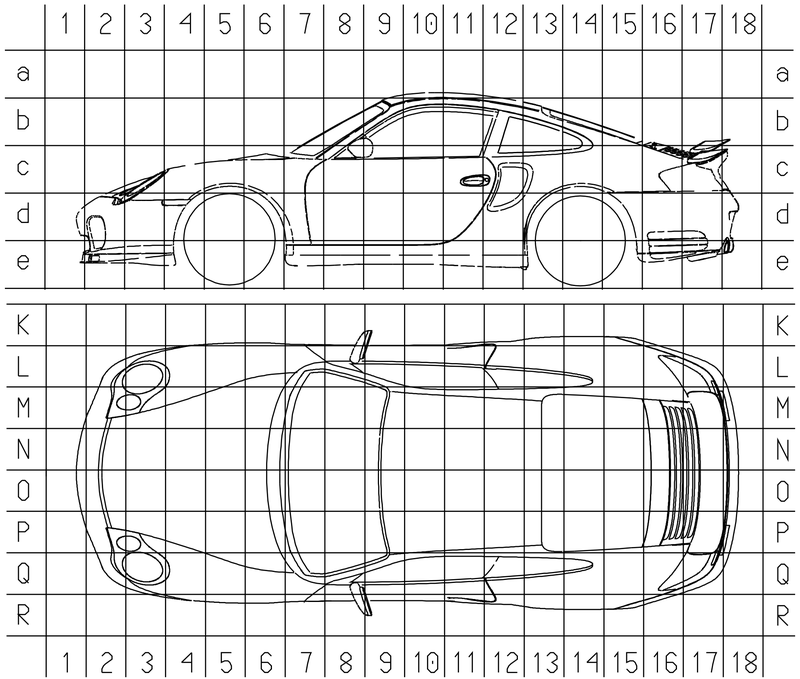

911 Turbo (996)
MODEL 2002 SHEET 24 WELDING

NR. NO.	FELD SECTION	DATUM DATE	GEÄNDERT CHANGED	GENEHMIGT APPROVE	BESCHREIBUNG DER ÄNDERUNG UND TERMINSCHLUESSEL REVISION RECORD AND CHANGE DATE CODE

ZEICHNUNG NUR MIT CAD AENDERN

© BEI UEBERMITTLUNG SCHUTZFAEHIGER INFORMATIONEN BEHAELT SICH DIE PORSCHE AG ALLE RECHTE FUER DEN FALL DER PATENTERTEILUNG VOR. JEDE VERFUEGUNGSBEFUGNIS, WIE KOPIER- UND WEITERGABERECHT, BLEIBT UNS.
© IN CASE OF COMMUNICATING PATENTABLE INFORMATION ALL RIGHTS ARISING IN THE EVENT OF A PATENT GRANT REMAIN WITH PORSCHE AG. ALL RIGHTS OF DISPOSITION, PARTICULARLY FOR COPYING OR DISTRIBUTING, ARE RESERVED.

CAD-SYSTEM UND VERWALTUNGSSYSTEM-SCHLUESSEL / CAD-SYSTEM AND ADMINISTRATION CODE
V O B E S Version: 2.3.3

TYP-PRUEF-DOK./TYPE-APPR.-DOC. | ENT.-NR./LAYOUT NO. | EA-NR./ENG PROJ.NO. 2-Programm

KONSTRUKTIONS-VERANTWORTUNG / DESIGN RESPONSIBILITY

NAME	ABT./DEPT.	TEL.	GEZ./DRAWN
BORDNETZ	VERKABELUNG	EGE 23	9.9.2000

SICH.-DOK. SAFETY DOC.

BENENNUNG: KABELVERBINDER

24

TITLE: SPLICES

MASZSTAB SCALE

TEIL-NR. PART-NO. 996.600.276.05

FORMAT D.SIZE A22

BLATT SHEET 24

VON OF

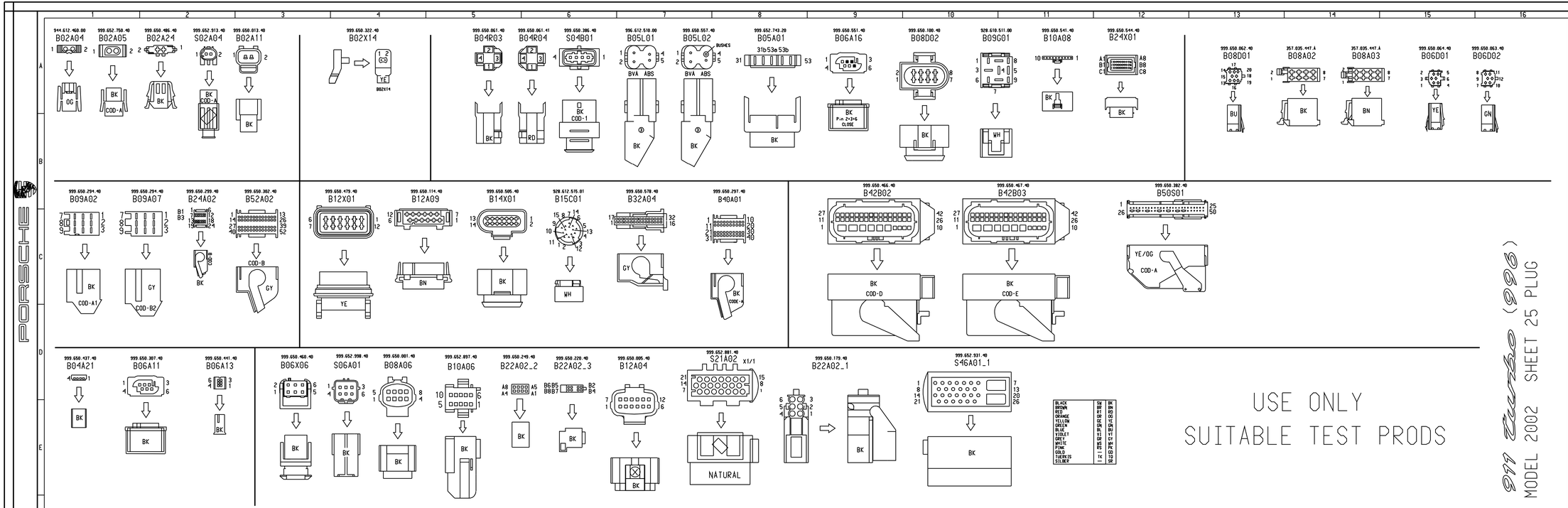
944.612.460.00 B02A04
999.652.750.40 B02A05
999.650.486.40 B02A24
999.652.513.40 S02A04
999.650.813.40 B02A11
999.650.322.40 B02X14
999.650.061.40 B04R03
999.650.061.41 B04R04
999.650.386.40 S04B01
996.612.510.00 B05L01
999.650.557.40 B05L02
BUSHES
31b53a53b
999.652.743.20 B05A01
999.650.551.40 B06A16
999.650.100.40 B08D02
928.610.511.00 B09G01
999.650.541.40 B10A08
999.650.544.40 B24X01
999.650.062.40 B08D01
357.035.447.A B08A02
357.035.447.A B08A03
999.650.064.40 B06D01
999.650.063.40 B06D02
999.650.294.40 B09A02
999.650.294.40 B09A07
999.650.299.40 B24A02
999.650.302.40 B52A02
999.650.479.40 B12X01
999.650.114.40 B12A09
999.650.505.40 B14X01
928.612.515.01 B15C01
999.650.578.40 B32A04
999.650.297.40 B40A01
999.650.466.40 B42B02
999.650.467.40 B42B03
999.650.382.40 B50S01
999.650.437.40 B04A21
999.650.307.40 B06A11
999.650.441.40 B06A13
999.650.460.40 B06X06
999.652.998.40 S06A01
999.650.001.40 B08A06
999.652.997.40 B10A06
999.650.243.40 B22A02_2
999.650.220.40 B22A02_3
999.650.005.40 B12A04
999.652.881.40 S21A02 X1/1
999.650.179.40 B22A02_1
999.652.931.40 S46A01_1
BK
OG
COD-A
COD-1
RD
YE
BN
GY
WH
VH
BU
GN
COD-A1
COD-B2
COD-B
COD-D
COD-E
YE/OG
NATURAL
BLACK SW BK
BROWN BR BN
RED RO RD
ORANGE OR OG
YELLOW GE YE
GREEN GN GN
BLUE BL BU
VIOLET VI VT
GREY GR GR
WHITE WS WH
PINK PK PK
GOLD GO GD
TURKIS TK TU
SILBER SR SR
USE ONLY
SUITABLE TEST PRODS
911 Turbo (996)
MODEL 2002 SHEET 25 PLUG
NR. NO. | FELD SECTION | DATUM DATE | GEANDERT CHANGED | GENEHMIGT APPROVE | BESCHREIBUNG DER ANDERUNG UND TERMINSCHLUESSEL
REVISION RECORD AND CHANGE DATE CODE
ZEICHNUNG NUR MIT CAD AENDERN!
BEI VERWERTUNG SONSTIGER INFORMATIONEN BEHALT SICH DIE
AG
ALLE RECHTE FUER DEN FALL DER PATENTERTEILUNG VOR. JEDE VERFUEGUNGSBERECHTIGUNG. WIE KOPIER- UND
WEITERGABE BLEIBT UNS VORBEHALTEN.
IN CASE OF COMMUNICATING PATENTABLE INFORMATION ALL RIGHTS ARISING IN THE EVENT OF A PATENT GRANT REMAIN RESERVED
AG.
ALL RIGHTS OF DISPOSITION, PARTICULARLY FOR COPYING OR DISTRIBUTING, ARE RESERVED.
CAD-SYSTEM UND VERWALTUNGSSYSTEM-SCHLUESSEL / CAD-SYSTEM AND ADMINISTRATION CODE
V O B E S Version: 2.2.2
TYP-PRUEF-DOC./TYPE-APPR.-DOC. | ENT.-NR./LAYOUT NO. | EA-NR./ENG.PROJ.NO. 2-PROGRAMM
KONSTRUKTIONS-VERANTWORTUNG / DESIGN RESPONSIBILITY
NAME BORONITZ | ABT./DEPT. VERKABELUNG | TEL. EGE-23 | GEZ./DRAWN
SICH.-DOC. SAFETY DOC. | BENENNUNG
CONNECTRO OVERVIEW
25
TITLE
STECKER-
UEBERSICHT
MASSSTAB SCALE
TEIL-NR. PART-NO.
996.600.277.05
FORMAT A23 D.SIZE
BLATT SHEET 25
VON OF

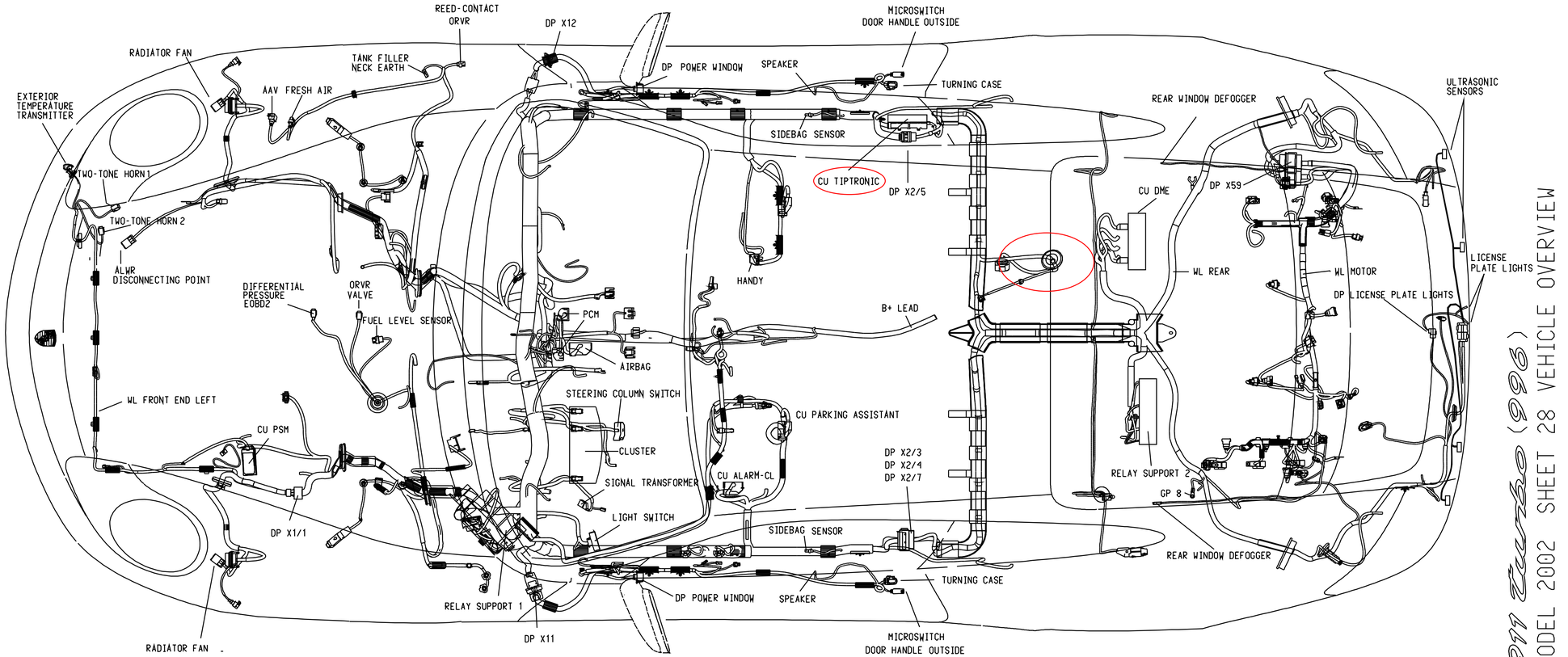

911 Turbo (996)

MODEL 2002 SHEET 28 VEHICLE OVERVIEW

NR. NO.	FELD SECTION	DATUM DATE	GEAENDERT CHANGED	GENEHMIGT APPROVE	BESCHREIBUNG DER AENDERUNG UND TERMINSCHLUESSEL REVISION RECORD AND CHANGE DATE CODE

ZEICHNUNG NUR MIT CAD AENDERN

© BEI UEBERMITTLUNG SCHUTZFAEHIGER INFORMATIONEN BEHAELT SICH DIE PORSCHE AG ALLE RECHTE FUER DEN FALL DER PATENTERTEILUNG VOR. JEDE VERFUEGUNGSBEFUGNIS, WIE KOPIER- UND WEITERGABERECHT, BEI UNS. GENEHMIGUNG VON ERSTLIEFERUNG UND AENDERUNG NACH VW DIT 55.
IN CASE OF COMMUNICATING PATENTABLE INFORMATION ALL RIGHTS ARISING IN THE EVENT OF A PATENT GRANT REMAIN WITH
© PORSCHE AG
ALL RIGHTS OF DISPOSITION, PARTICULARLY FOR COPYING OR DISTRIBUTING, ARE RESERVED.
APPROVAL FOR INITIAL SUPPLY AND MODIFICATIONS ACCORDING TO VW DIT 55.
THE ENGLISH TRANSLATION IS BELIEVED TO BE ACCURATE. IN CASE OF DISCREPANCIES THE GERMAN VERSION SHALL GOVERN.

CAD-SYSTEM UND VERWALTUNGSSYSTEM-SCHLUESSEL / CAD-SYSTEM AND ADMINISTRATION CODE: PWS

TYP-PRUEF-DOK./TYPE-APPR.-DOC.	ENT.-NR./LAYOUT NO.	EA-NR./ENG PROJ.NO.
		2-PROGRAMM

KONSTRUKTIONS-VERANTWORTUNG / DESIGN RESPONSIBILITY

NAME	ABT./DEPT.	TEL.	GEZ./DRAWN
BORDNETZ	VERKABELUNG	EGE 23	9.9.2000

SICH.-DOK. / SAFETY DOC.: 28

BENENNUNG: FAHRZEUGUEBERSICHT

TITLE: HARNESS AND COMPONENTS

MASZSTAB / SCALE:

TEIL-NR. / PART-NO.: 996.600.299.05

FORMAT / D.SIZE: A22

BLATT / SHEET: 28

VON / OF: