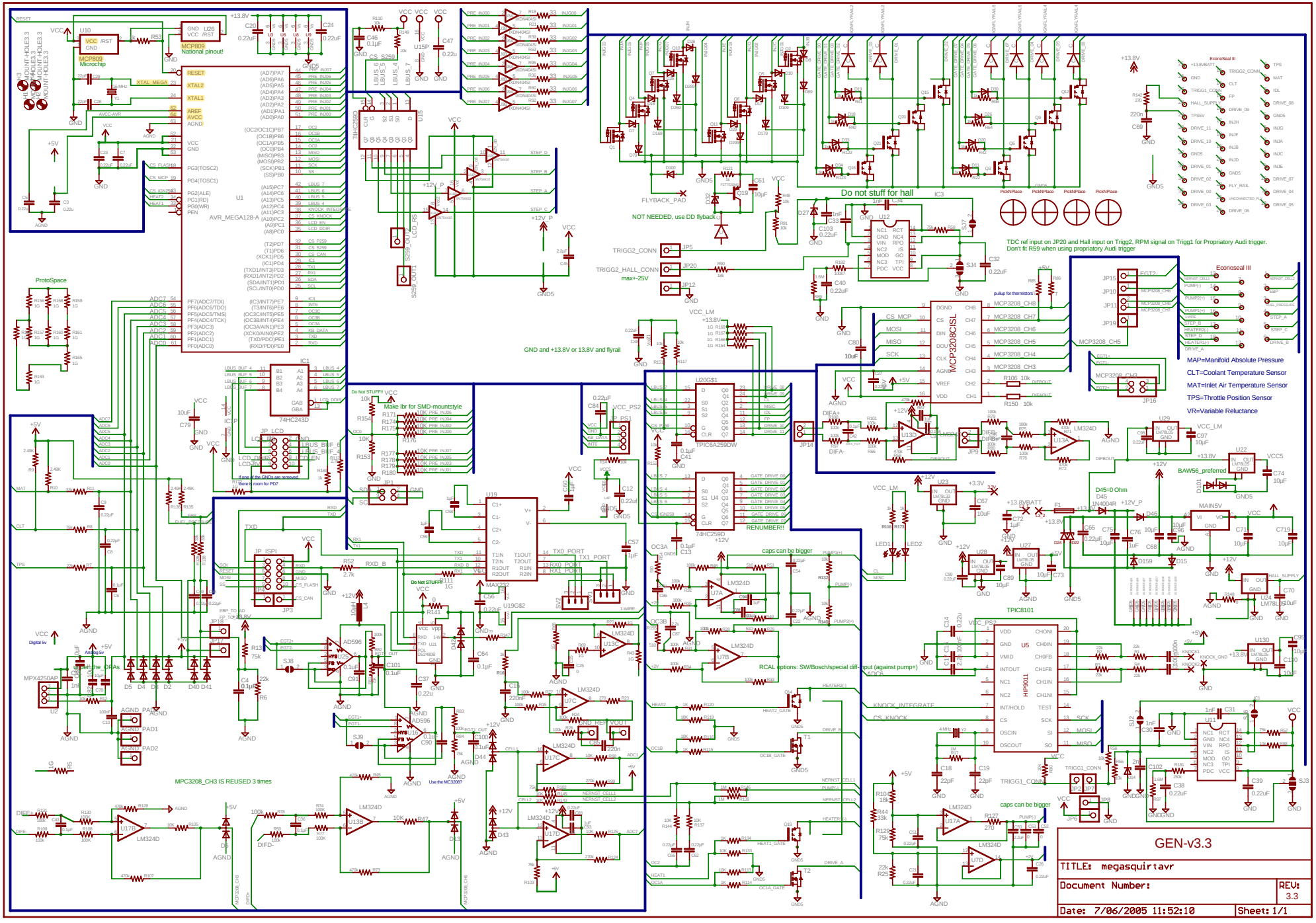
GEN-v3.3
TITLE: megasquirtavr
Document Number:
REV: 3.3
Date: 7/06/2005 11:52:10
Sheet: 1/1
MAP=Manifold Absolute Pressure
CLT=Coolant Temperature Sensor
MAT=Inlet Air Temperature Sensor
TPS=Throttle Position Sensor
VR=Variable Reluctance
Do not stuff for hall
NOT NEEDED, use DD flyback
TDC ref input on JP20 and Hall input on Trigg2. RPM signal on Trigg1 for Propriatory Audi trigger.
Don't fit R59 when using propriatory Audi trigger
GND and +13.8V or 13.8V and flyrail
Make lbr for SMD-mountstyle
MPC3208_CH3 IS REUSED 3 times
RCAL options: SW/Bosch/special diff-input (against pump+)
caps can be bigger
ProtoSpace
Econoseal III
National pinout!
Microchip
AVR_MEGA128-A
MCP3208CISL
TPIC6A259DW
74HC259D
TPIC8101
MPX4250AP
BAW56_preferred
D45=0 Ohm