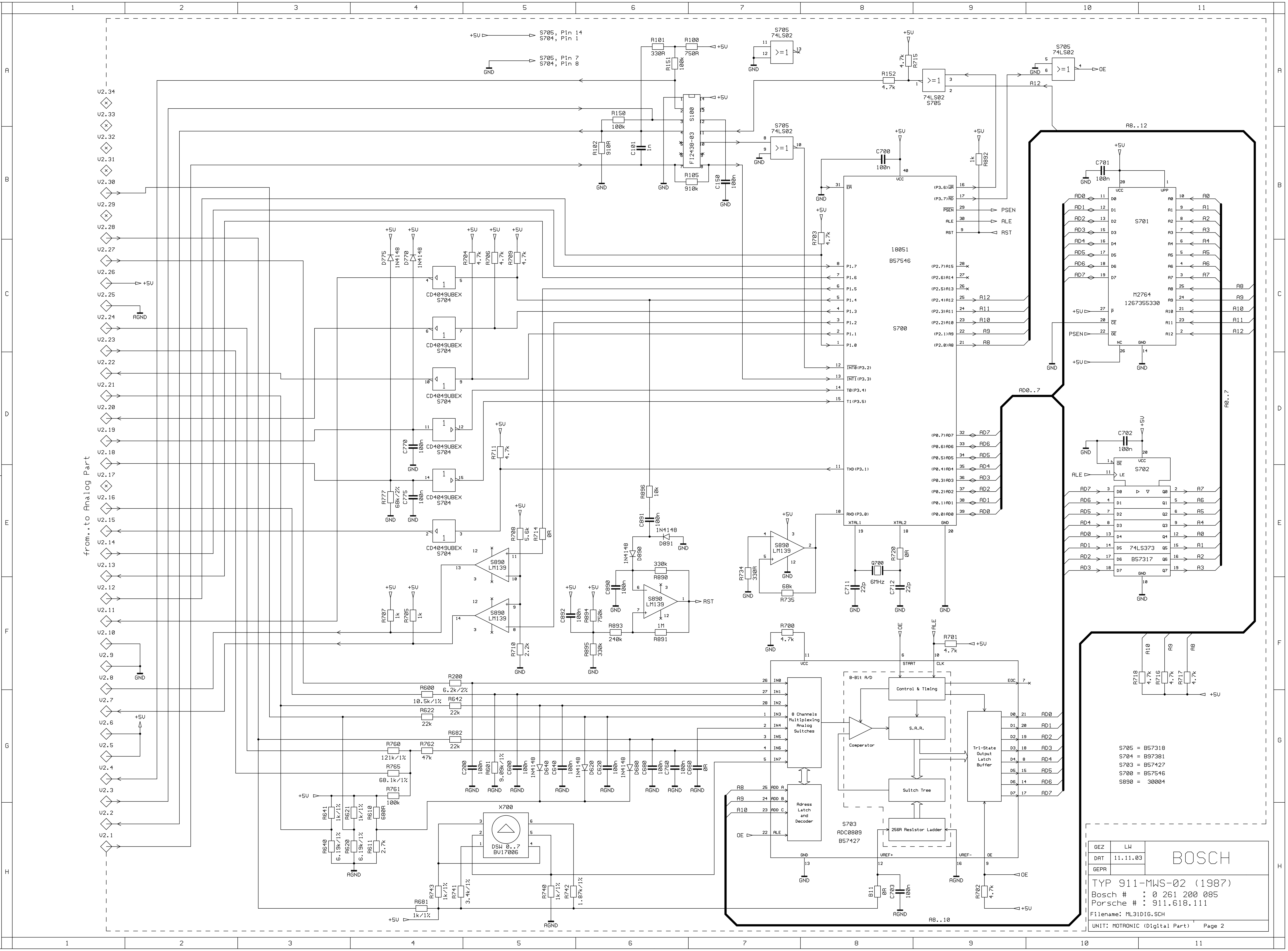

from..to Analog Part
V2.1 V2.2 V2.3 V2.4 V2.5 V2.6 V2.7 V2.8 V2.9 V2.10 V2.11 V2.12 V2.13 V2.14 V2.15 V2.16 V2.17 V2.18 V2.19 V2.20 V2.21 V2.22 V2.23 V2.24 V2.25 V2.26 V2.27 V2.28 V2.29 V2.30 V2.31 V2.32 V2.33 V2.34
S705, Pin 14
S704, Pin 1
S705, Pin 7
S704, Pin 8
S705 74LS02
S100 FI2438-03
CD4049UBEX S704
S890 LM139
i8051 B57546 S700
M2764 1267355330 S701
74LS373 B57317 S702
S703 ADC0809 B57427
8-Bit A/D
Control & Timing
S.A.R.
Switch Tree
256R Resistor Ladder
Tri-State Output Latch Buffer
Comperator
8 Channels Multiplexing Analog Switches
Adress Latch and Decoder
X700 DSW 0..7 BU17006
Q700 6MHz
A8..12
A0..7
AD0..7
A8..10
PSEN
ALE
RST
OE
+5V
GND
AGND
S705 = B57318
S704 = B97381
S703 = B57427
S700 = B57546
S890 = 30004
GEZ LW
DAT 11.11.03
GEPR
BOSCH
TYP 911-MWS-02 (1987)
Bosch # : 0 261 200 085
Porsche # : 911.618.111
Filename: ML31DIG.SCH
UNIT: MOTRONIC (Digital Part)
Page 2