LOCK AND UNLOCK WITH KEYLESS ENTRY

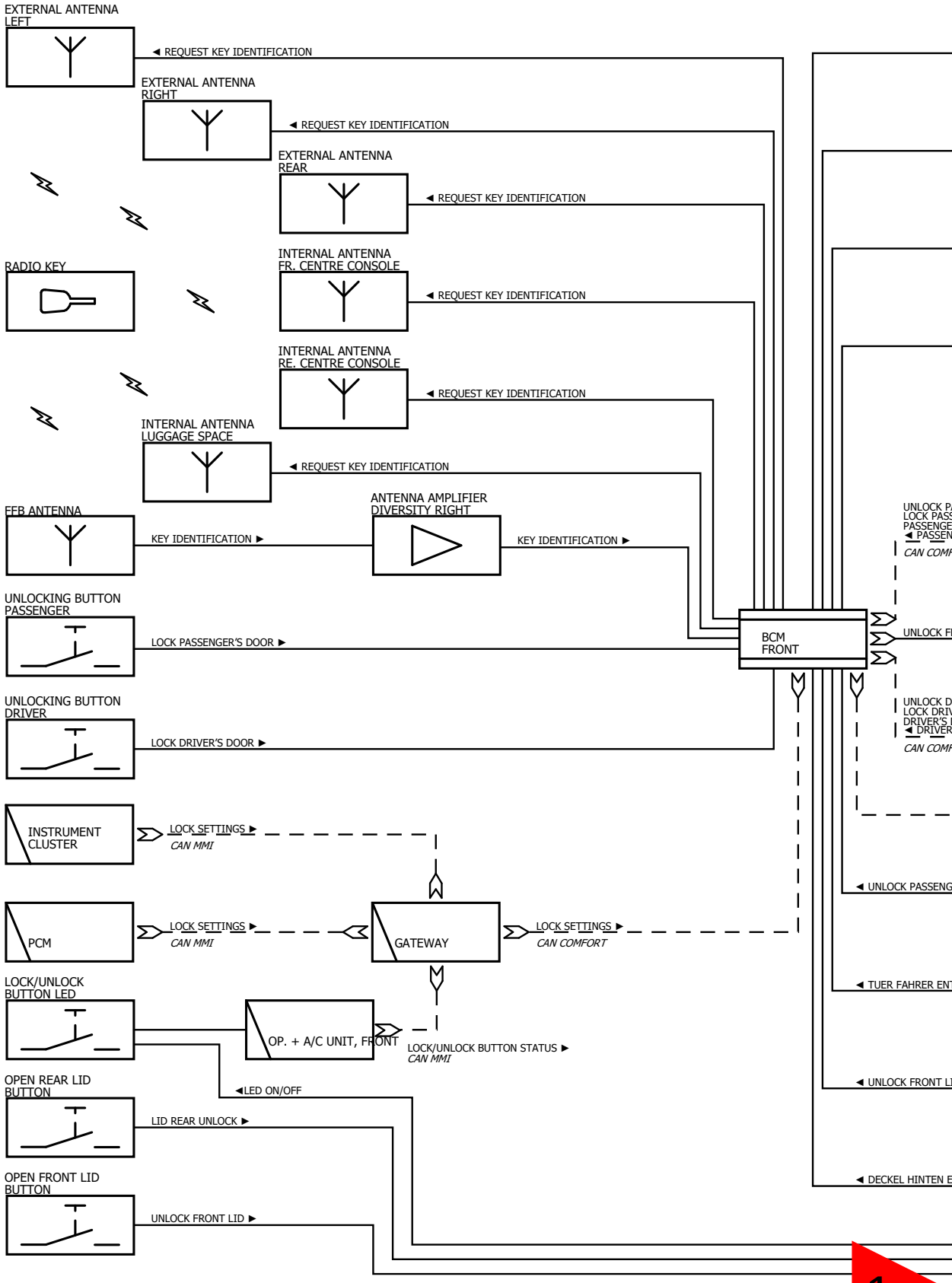

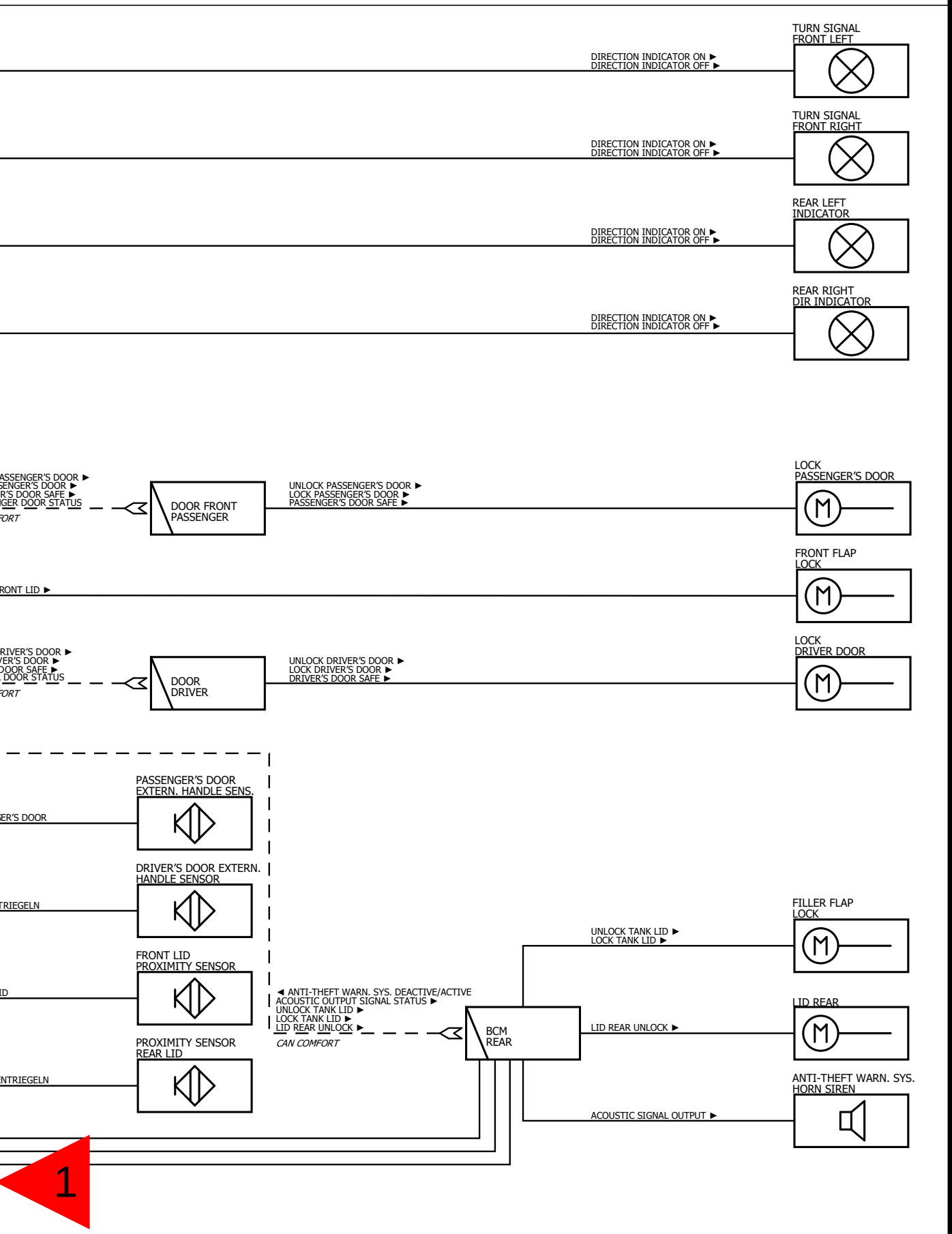
TURN SIGNAL FRONT LEFT
DIRECTION INDICATOR ON ►
DIRECTION INDICATOR OFF ►
TURN SIGNAL FRONT RIGHT
DIRECTION INDICATOR ON ►
DIRECTION INDICATOR OFF ►
REAR LEFT INDICATOR
DIRECTION INDICATOR ON ►
DIRECTION INDICATOR OFF ►
REAR RIGHT DIR INDICATOR
DIRECTION INDICATOR ON ►
DIRECTION INDICATOR OFF ►
ASSENGER'S DOOR ►
SENGER'S DOOR ►
R'S DOOR SAFE ►
GER DOOR STATUS
FORT
DOOR FRONT PASSENGER
UNLOCK PASSENGER'S DOOR ►
LOCK PASSENGER'S DOOR ►
PASSENGER'S DOOR SAFE ►
LOCK PASSENGER'S DOOR
RONT LID ►
FRONT FLAP LOCK
RIVER'S DOOR ►
VER'S DOOR ►
DOOR SAFE ►
DOOR STATUS
FORT
DOOR DRIVER
UNLOCK DRIVER'S DOOR ►
LOCK DRIVER'S DOOR ►
DRIVER'S DOOR SAFE ►
LOCK DRIVER DOOR
PASSENGER'S DOOR EXTERN. HANDLE SENS.
ER'S DOOR
DRIVER'S DOOR EXTERN. HANDLE SENSOR
TRIEGELN
FRONT LID PROXIMITY SENSOR
ID
PROXIMITY SENSOR REAR LID
NTRIEGELN
◄ ANTI-THEFT WARN. SYS. DEACTIVE/ACTIVE
ACOUSTIC OUTPUT SIGNAL STATUS ►
UNLOCK TANK LID ►
LOCK TANK LID ►
LID REAR UNLOCK ►
CAN COMFORT
BCM REAR
UNLOCK TANK LID ►
LOCK TANK LID ►
FILLER FLAP LOCK
LID REAR UNLOCK ►
LID REAR
ACOUSTIC SIGNAL OUTPUT ►
ANTI-THEFT WARN. SYS. HORN SIREN